US007893897B2

(12) **United States Patent**
Chung et al.

(10) **Patent No.: US 7,893,897 B2**
(45) **Date of Patent: *Feb. 22, 2011**

(54) **VOLTAGE BASED DATA DRIVING CIRCUITS AND DRIVING METHODS OF ORGANIC LIGHT EMITTING DISPLAYS USING THE SAME**

(75) Inventors: **Bo Yong Chung**, Seoul (KR); **Do Hyung Ryu**, Suwon-si (KR); **Hong Kwon Kim**, Euiwang-si (KR); **Oh Kyong Kwon**, Seoul (KR)

(73) Assignee: **Samsung Mobile Display Co., Ltd.**, Suwon-si, Gyeonggi-do (KR)

(*) Notice: Subject to any disclaimer, the term of this patent is extended or adjusted under 35 U.S.C. 154(b) by 784 days.

This patent is subject to a terminal disclaimer.

(21) Appl. No.: **11/491,880**

(22) Filed: **Jul. 25, 2006**

(65) **Prior Publication Data**

US 2007/0024542 A1 Feb. 1, 2007

(30) **Foreign Application Priority Data**

Aug. 1, 2005 (KR) 10-2005-0070438

(51) **Int. Cl.**
G09G 3/30 (2006.01)

(52) **U.S. Cl.** **345/82**; 315/169.3

(58) **Field of Classification Search** 345/36, 345/39, 44–46, 74.1–83; 315/169.3; 313/463
See application file for complete search history.

(56) **References Cited**

U.S. PATENT DOCUMENTS

6,710,548 B2 3/2004 Kimura

(Continued)

FOREIGN PATENT DOCUMENTS

EP 1 796 070 6/2007

(Continued)

OTHER PUBLICATIONS

Hai-Jung In, et al., "A Novel Volage-Programming Pixel with Current-Correction Method for Lage-Size and High-Resoluation AMOLEDs on Poly-Si Backplane", International Meeting on Information Display, IMID'05 Digest, No. 286, pp. 901-904 (Jul. 23, 2005).

(Continued)

Primary Examiner—Chanh Nguyen
Assistant Examiner—Ram A Mistry
(74) *Attorney, Agent, or Firm*—Lee & Morse, P.C.

(57) **ABSTRACT**

A data driving circuit for driving pixels of a light emitting display to display images with uniform brightness may include a gamma voltage unit that generates a plurality of gray scale voltages, a digital-analog converter that selects, as a data signal, one of the plurality of gray scale voltages using first data, a decoder that generates second data using the first data, a current sink, a voltage controller that controls a voltage value of the data signal using the second data and a compensation voltage generated based on the predetermined current, and a switching unit that supplies the data signal to the pixel during any partial period of the complete period elapsing after the first partial period. The current sink receives a predetermined current from the pixel during a first partial period of a complete period for driving the pixel based on the selected gray scale voltage.

22 Claims, 10 Drawing Sheets

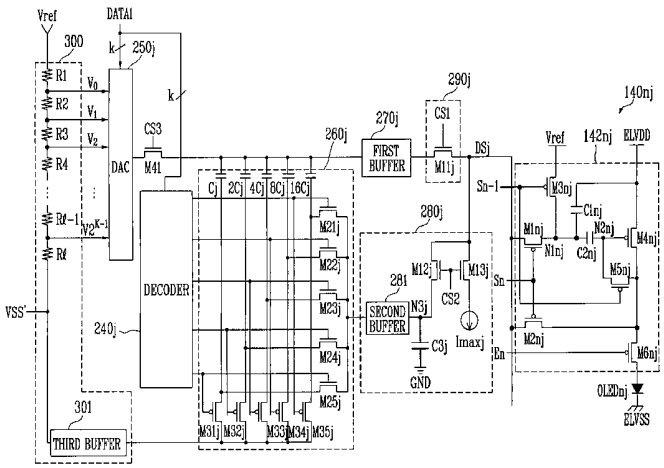

U.S. PATENT DOCUMENTS

6,806,497	B2	10/2004	Jo	
6,809,706	B2	10/2004	Shimoda	
6,859,193	B1	2/2005	Yumoto	
6,873,117	B2	3/2005	Ishizuka	
6,950,045	B2 *	9/2005	Kim	341/118
7,030,842	B2	4/2006	Ha et al.	
7,113,156	B2	9/2006	Hashimoto	
7,432,891	B2	10/2008	Fruehauf	
2002/0109655	A1 *	8/2002	Yer et al.	345/87
2003/0122745	A1 *	7/2003	Miyazawa	345/76
2003/0156104	A1 *	8/2003	Morita	345/204
2003/0189541	A1	10/2003	Hashimoto	
2004/0056852	A1 *	3/2004	Shih et al.	345/204
2004/0104840	A1	6/2004	Awata et al.	
2004/0222953	A1 *	11/2004	Smith	345/87
2004/0227749	A1 *	11/2004	Kimura	345/211
2008/0030438	A1	2/2008	Marx et al.	

FOREIGN PATENT DOCUMENTS

JP	10-254410	A	9/1998
JP	11-219146	A	8/1999
JP	2002-311898	A	10/2002
JP	2003-043993	A	2/2003
JP	2003-058106	A	2/2003
JP	2003-140613	A	5/2003
JP	2003-295828	A	10/2003
JP	2004-004675	A	1/2004
JP	2004-125852	A	4/2004
JP	2004-145197	A	5/2004
JP	2004-192000	A	7/2004
JP	2004-287345	A	10/2004
JP	2007-536585	T	12/2007
KR	10-2003-0081080		10/2003
KR	10-2004-0061902		7/2004
WO	WO 2005/029456	A1	3/2005

OTHER PUBLICATIONS

Y. Matsueda, et al., "AMOLED with Integrated 6-Bit Gamma Compensated Digital Data Driver", 2004 SID International Symposium, SID 04 Digest, pp. 1116-1119 (May 25, 2004).

* cited by examiner

FIG. 1
(RELATED ART)

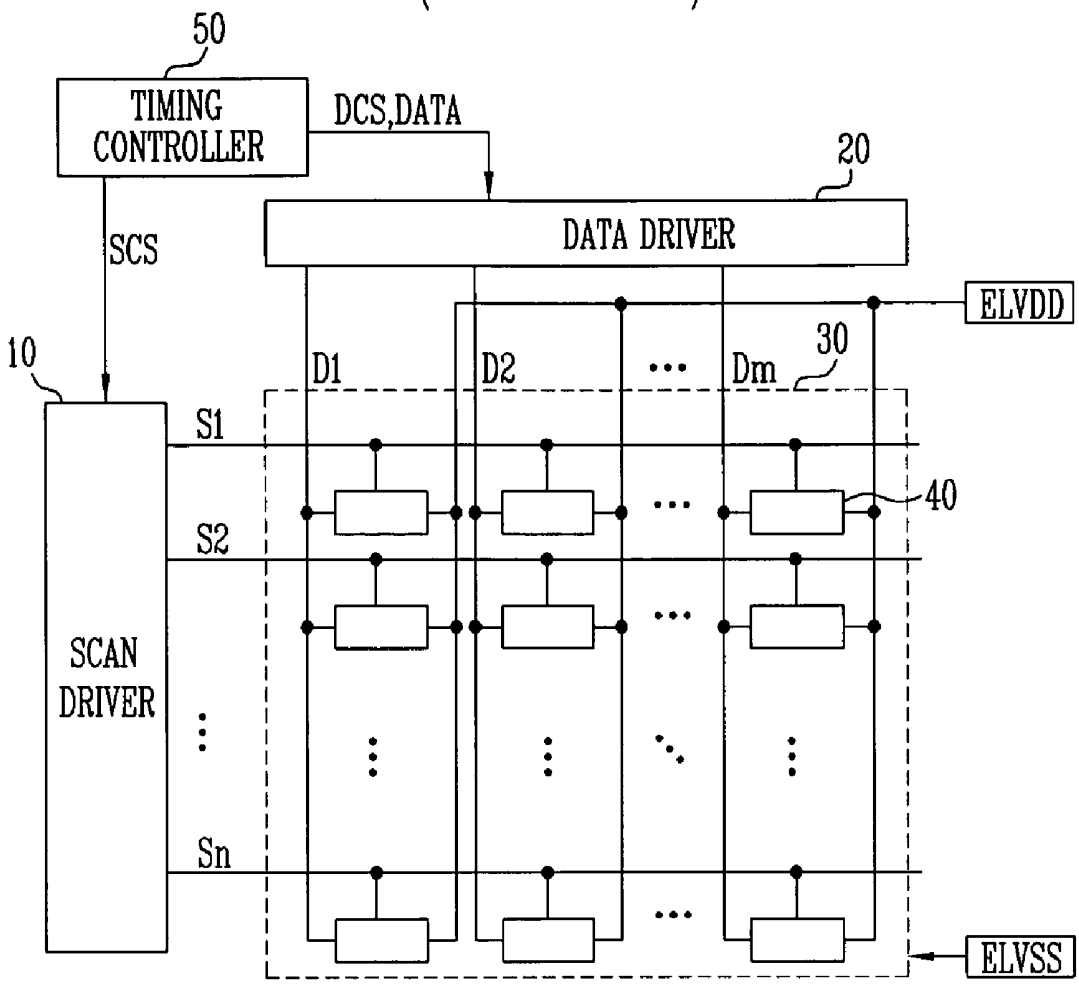

FIG. 2

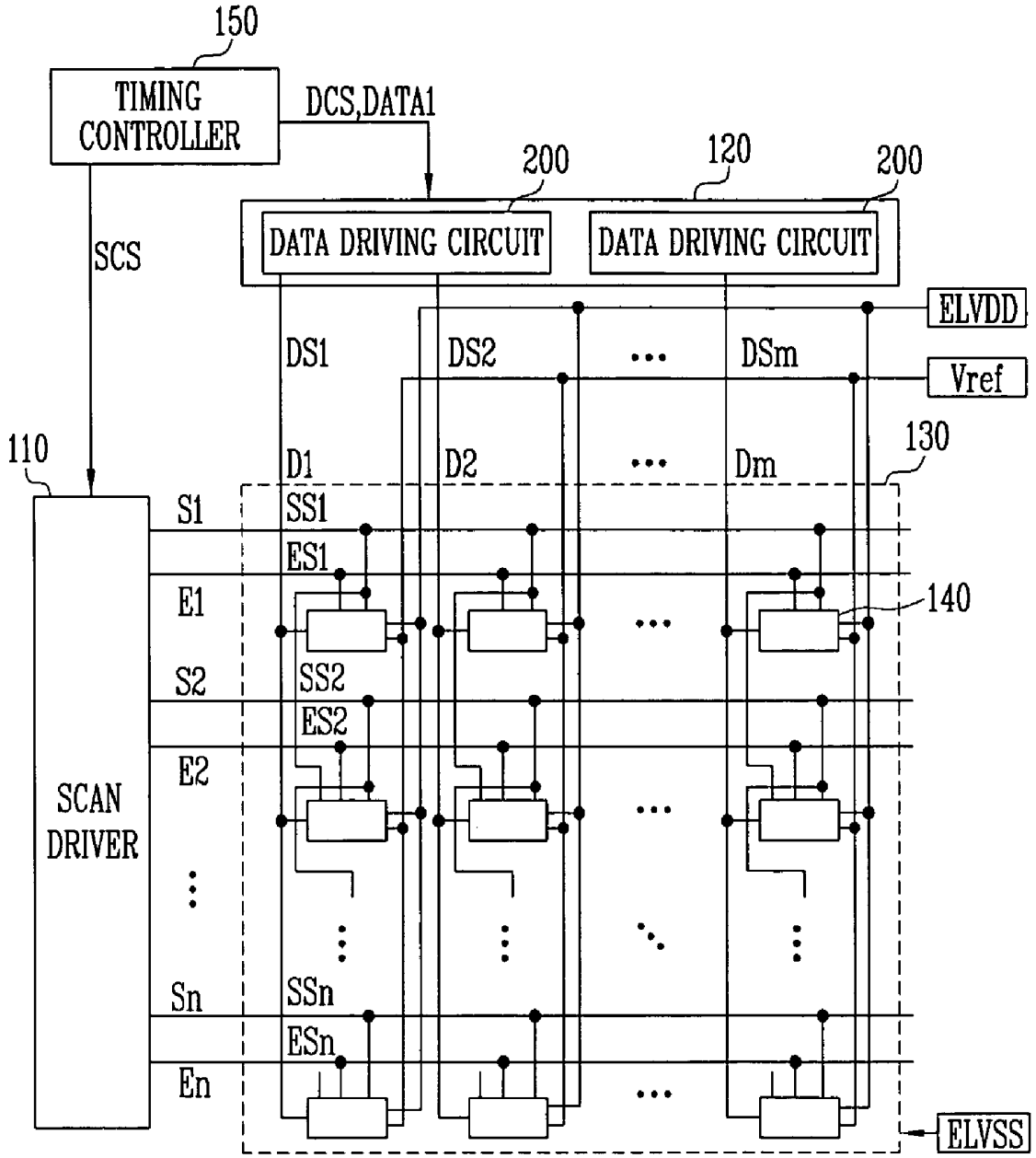
150
TIMING CONTROLLER
DCS,DATA1
200
120
200
DATA DRIVING CIRCUIT
DATA DRIVING CIRCUIT
SCS
ELVDD
DS1
DS2
DSm
Vref
110
130
D1
D2
Dm
S1
SS1
ES1
E1
140
S2
SS2
ES2
E2
SCAN DRIVER
Sn
SSn
ESn
En
ELVSS

FIG. 3

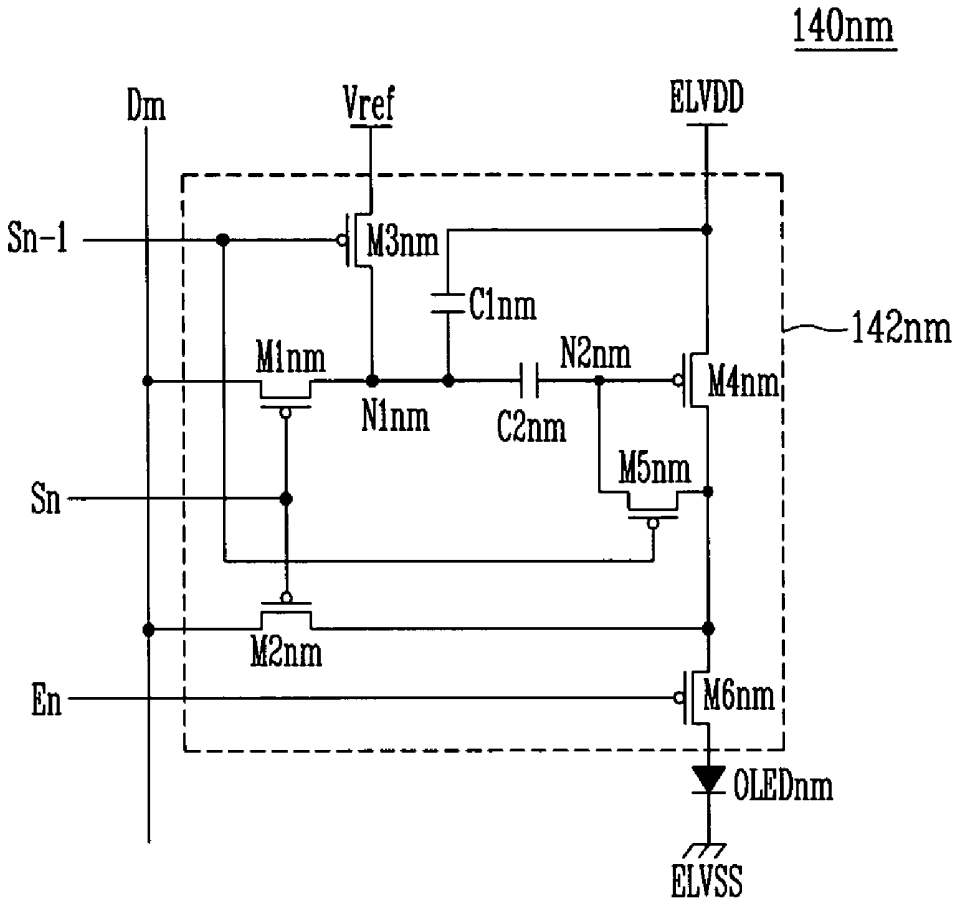
140nm
Dm
Vref
ELVDD
Sn-1
M3nm
C1nm
142nm
M1nm
N2nm
M4nm
N1nm
C2nm
M5nm
Sn
M2nm
En
M6nm
OLEDnm
ELVSS

FIG. 4

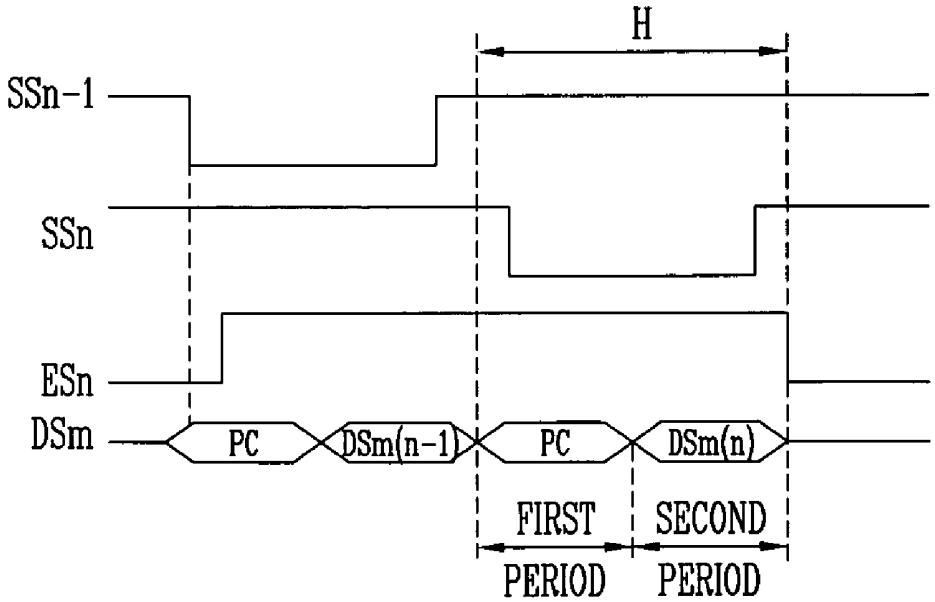
H
SSn-1
SSn
ESn
DSm
PC
DSm(n-1)
PC
DSm(n)
FIRST PERIOD
SECOND PERIOD

FIG. 5

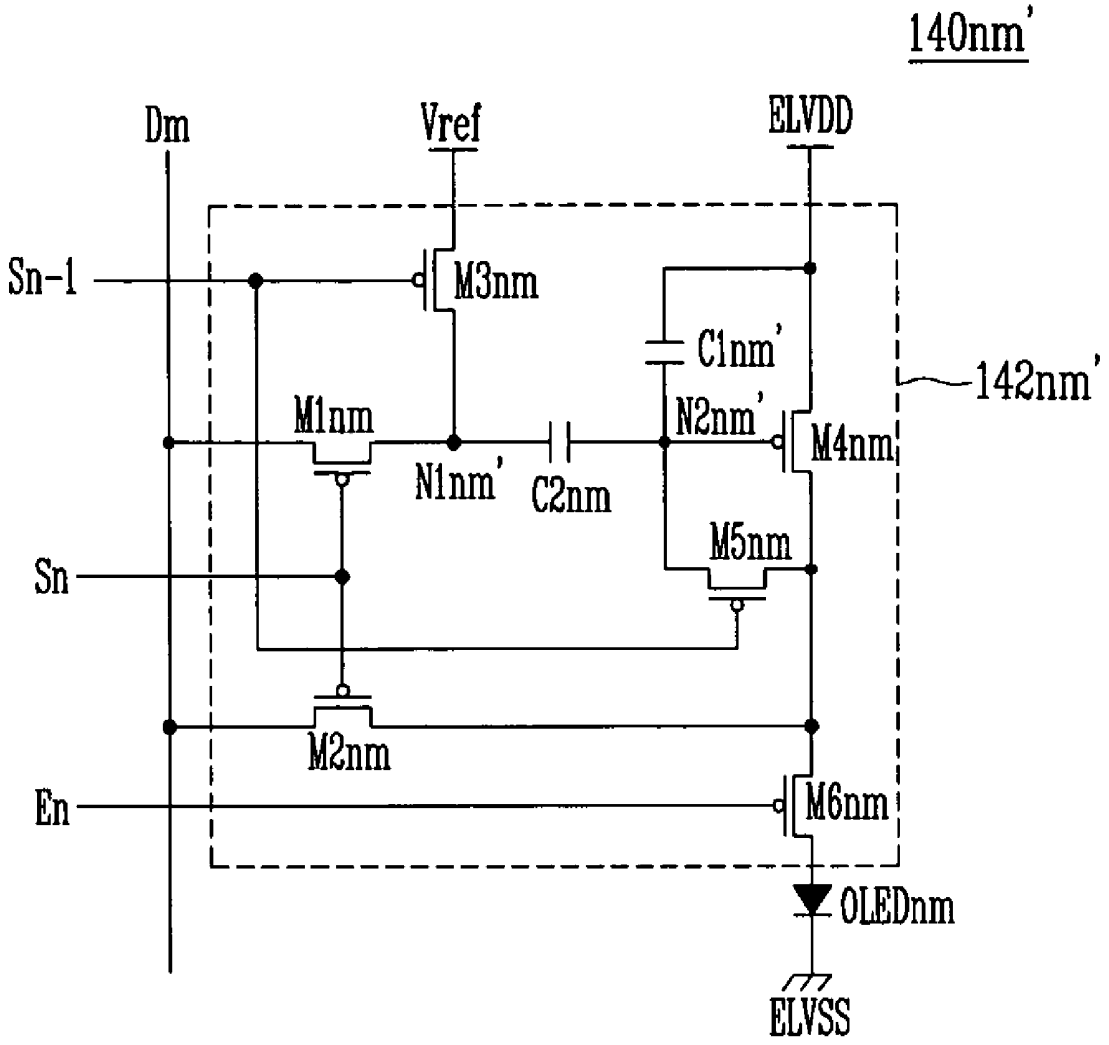
140nm'
Dm
Vref
ELVDD
Sn-1
M3nm
C1nm'
142nm'
M1nm
N2nm'
M4nm
N1nm'
C2nm
M5nm
Sn
M2nm
En
M6nm
OLEDnm
ELVSS

FIG. 6

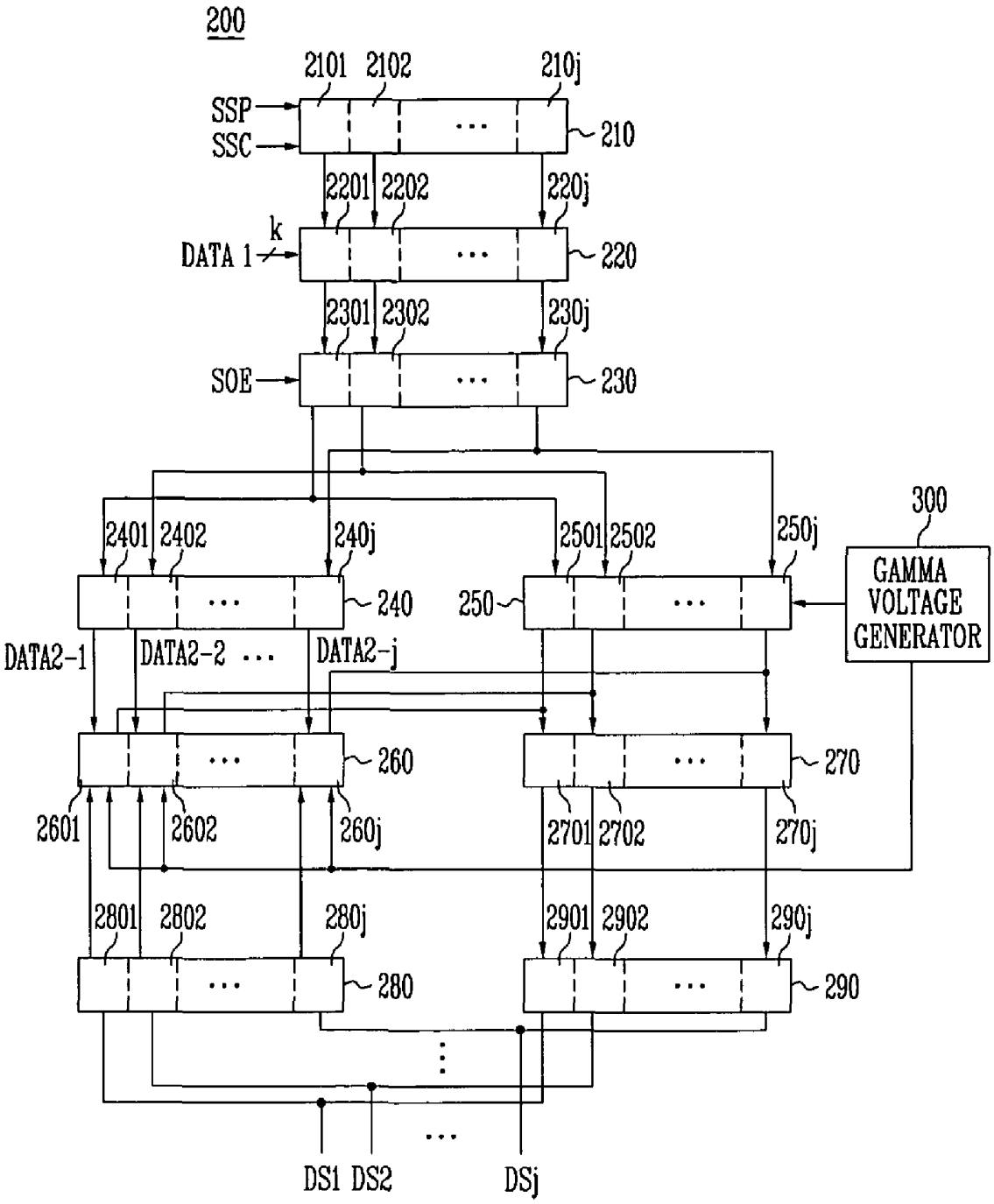
200
2101
2102
210j
SSP
SSC
210
2201
2202
220j
k
DATA 1
220
2301
2302
230j
SOE
230
300
2401
2402
240j
2501
2502
250j
GAMMA VOLTAGE GENERATOR
240
250
DATA2-1
DATA2-2
DATA2-j
260
270
2601
2602
260j
2701
2702
270j
2801
2802
280j
2901
2902
290j
280
290
DS1
DS2
DSj

FIG. 7

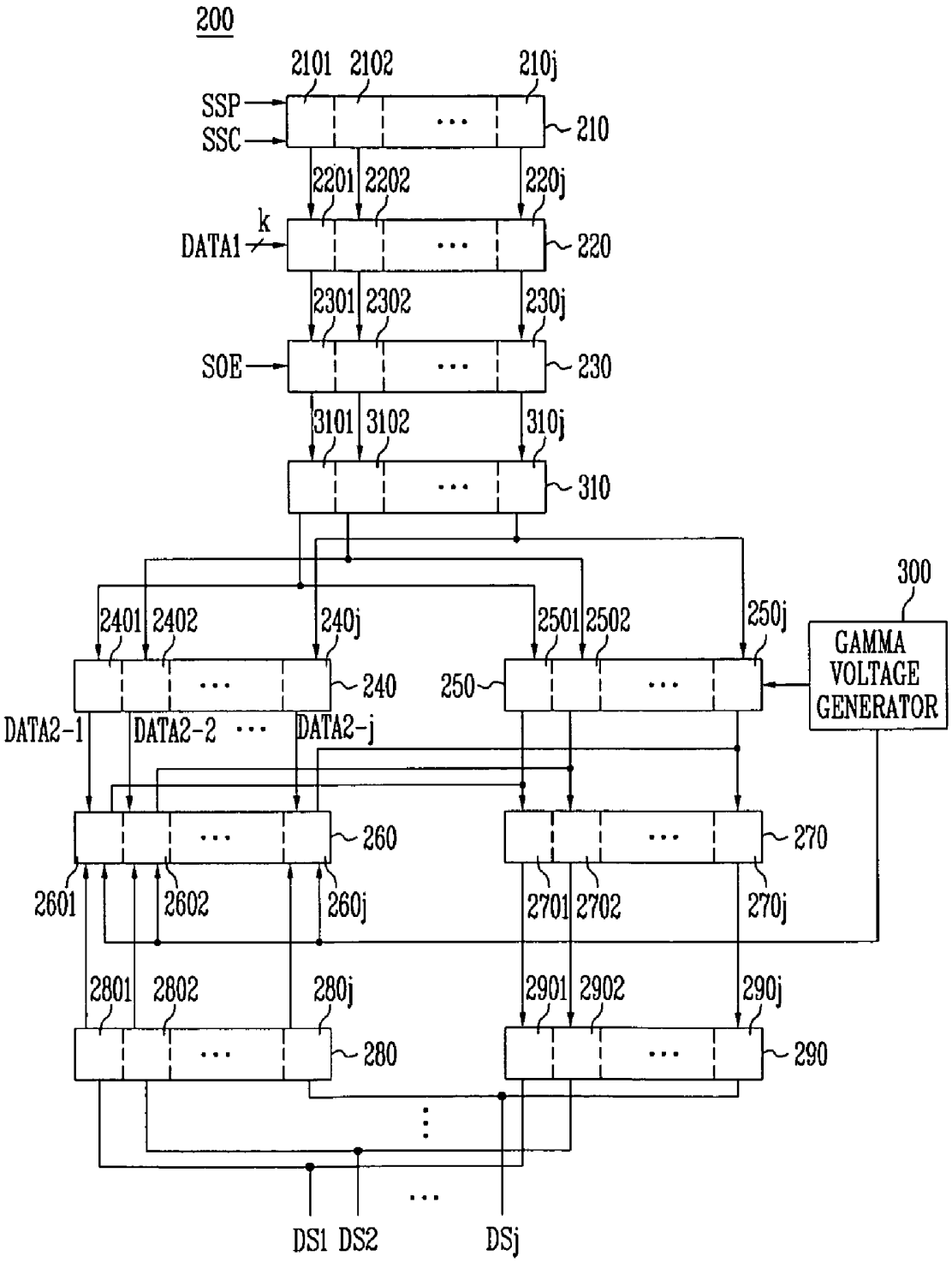
200
2101
2102
210j
SSP
SSC
210
2201
2202
220j
k
DATA1
220
2301
2302
230j
SOE
230
3101
3102
310j
310
300
2401
2402
240j
2501
2502
250j
GAMMA VOLTAGE GENERATOR
240
250
DATA2-1
DATA2-2
DATA2-j
260
270
2601
2602
260j
2701
2702
270j
2801
2802
280j
2901
2902
290j
280
290
DS1
DS2
DSj

FIG. 8

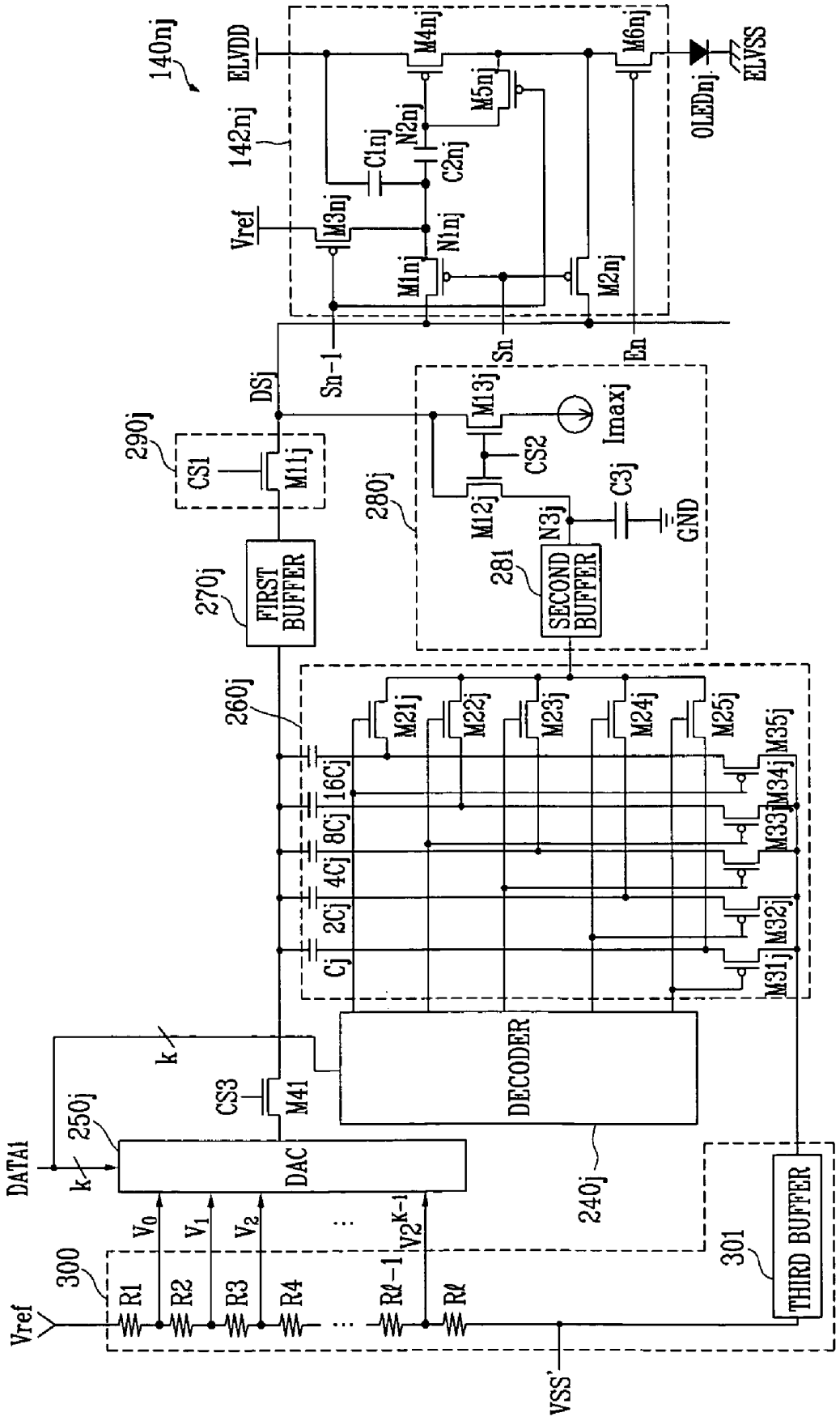
140nj
ELVDD
142nj
Vref
M3nj
C1nj
N2nj
C2nj
N1nj
M1nj
M4nj
M5nj
M6nj
M2nj
OLEDnj
ELVSS
Sn-1
Sn
En
DSj
290j
CS1
M11j
270j
FIRST BUFFER
280j
M13j
CS2
Imaxj
M12j
N3j
C3j
GND
281
SECOND BUFFER
260j
M21j
M22j
M23j
M24j
M25j
M35j
M34j
M33j
M32j
M31j
Cj
2Cj
4Cj
8Cj
16Cj
k
CS3
M41
DECODER
240j
DATA1
250j
DAC
V0
V1
V2
V2k-1
300
R1
R2
R3
R4
Rℓ-1
Rℓ
Vref
VSS'
301
THIRD BUFFER

FIG. 9

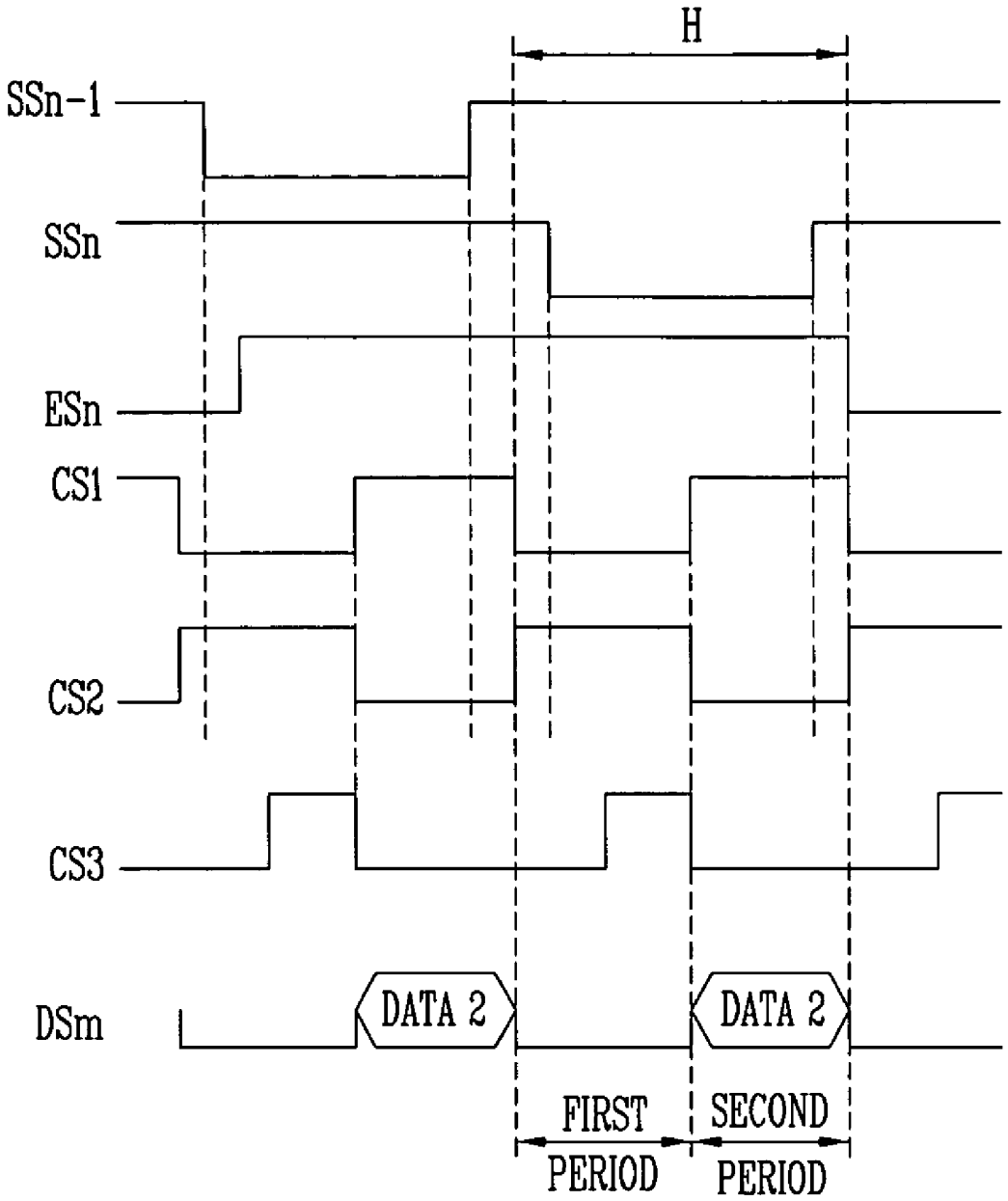
H
SSn-1
SSn
ESn
CS1
CS2
CS3
DSm
DATA 2
DATA 2
FIRST PERIOD
SECOND PERIOD

FIG. 10

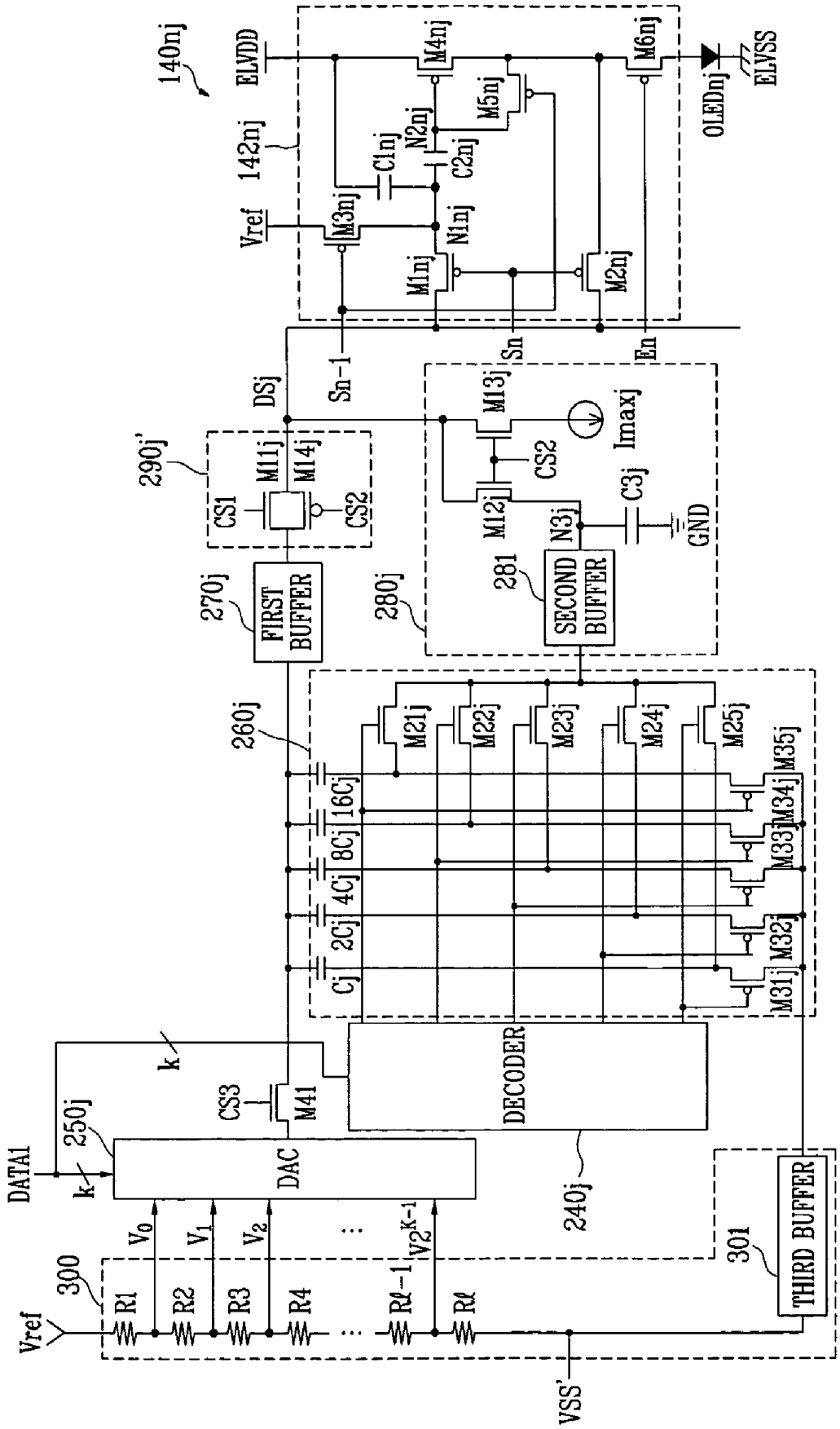
140nj
ELVDD
142nj
Vref
M3nj
C1nj
N2nj
C2nj
M4nj
M5nj
M6nj
OLEDnj
ELVSS
M1nj
N1nj
M2nj
DSj
Sn-1
Sn
En
290j'
CS1
M11j
M14j
CS2
270j
FIRST BUFFER
M13j
CS2
Imaxj
M12j
N3j
C3j
GND
281
SECOND BUFFER
280j
260j
M21j
M22j
M23j
M24j
M25j
M35j
M34j
M33j
M32j
M31j
16Cj
8Cj
4Cj
2Cj
Cj
k
CS3
M41
DECODER
DATA1
250j
DAC
240j
V0
V1
V2
V2K-1
300
R1
R2
R3
R4
Rl-1
Rl
301
THIRD BUFFER
VSS'

FIG. 11

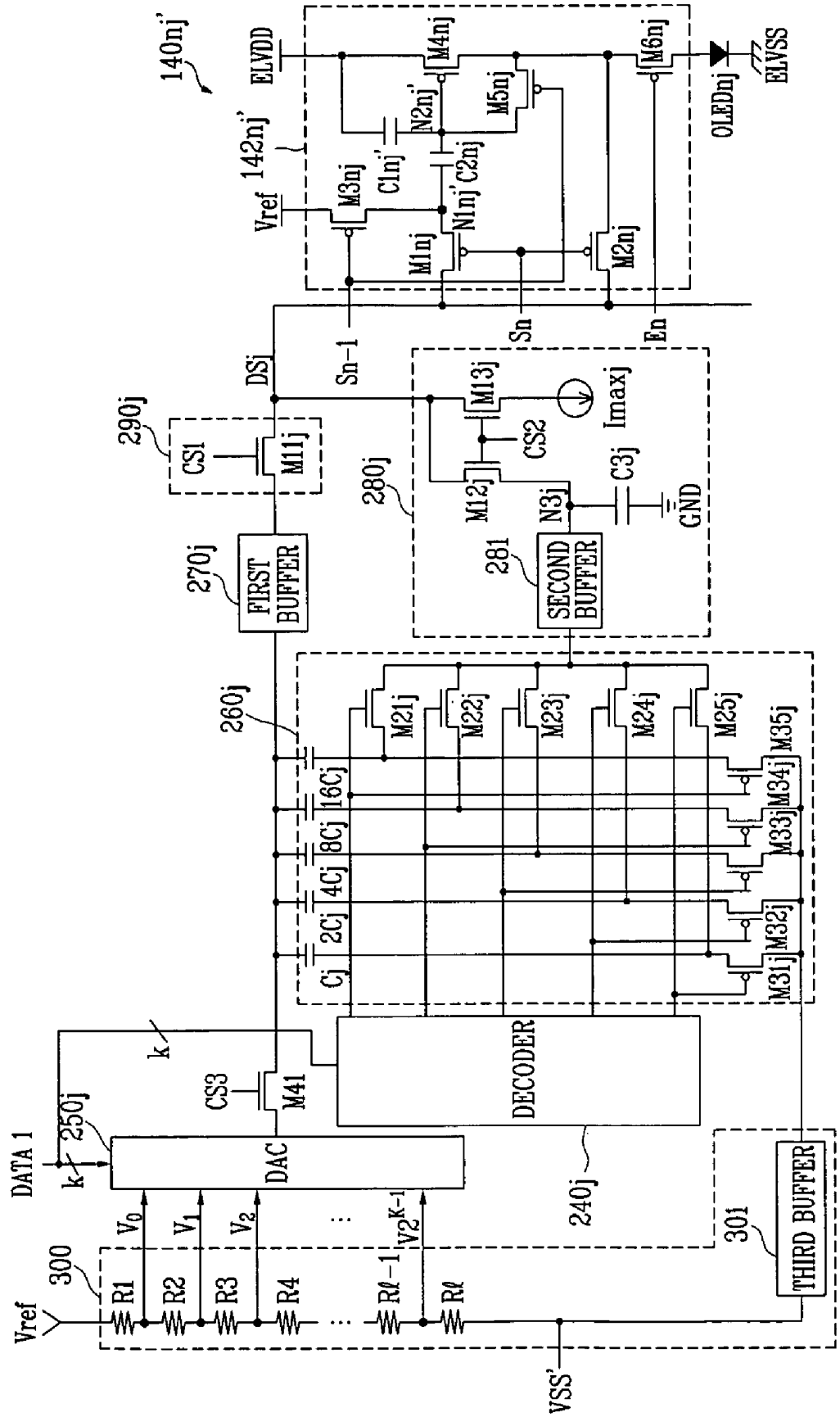
140nj'
142nj'
ELVDD
ELVSS
OLEDnj
M1nj
M2nj
M3nj
M4nj
M5nj
M6nj
N1nj'
N2nj'
C1nj'
C2nj
Vref
DSj
Sn-1
Sn
En
290j
CS1
M11j
270j
FIRST BUFFER
280j
M12j
M13j
CS2
Imaxj
C3j
N3j
GND
281
SECOND BUFFER
260j
M21j
M22j
M23j
M24j
M25j
M31j
M32j
M33j
M34j
M35j
Cj
2Cj
4Cj
8Cj
16Cj
k
CS3
M41
DECODER
240j
DATA 1
250j
DAC
300
R1
R2
R3
R4
R(ℓ-1)
Rℓ
V0
V1
V2
V2^K-1
301
THIRD BUFFER
VSS'

VOLTAGE BASED DATA DRIVING CIRCUITS AND DRIVING METHODS OF ORGANIC LIGHT EMITTING DISPLAYS USING THE SAME

BACKGROUND

1. Field of the Invention

The present invention relates to data driving circuits, light emitting displays employing such data driving circuits and methods of driving the light emitting display. More particularly, the invention relates to a data driving circuit capable of displaying images with uniform brightness, a light emitting display using such a data driving circuit and a method of driving the light emitting display to display images with uniform brightness.

2. Description of Related Art

Flat panel displays (FPDs), which are generally lighter and more compact than cathode ray tubes (CRTs), are being developed. FPDs include liquid crystal displays (LCDs), field emission displays (FEDs), plasma display panels (PDPs) and light emitting displays.

Light emitting displays may display images using organic light emitting diodes (OLEDs) that generate light when electrons and holes recombine. Light emitting displays generally have fast response times and consume relatively low amounts of power.

FIG. **1** illustrates a schematic of the structure of a known light emitting display.

As shown in FIG. **1**, the light emitting display may include a pixel unit **30**, a scan driver **10**, a data driver **20** and a timing controller **50**. The pixel unit **30** may include a plurality of pixels **40** connected to scan lines S**1** to Sn and data lines D**1** to Dm. The scan driver **10** may drive the scan lines S**1** to Sn. The data driver **20** may drive the data lines D**1** to Dm. The timing controller **50** may control the scan driver **10** and the data driver **20**.

The timing controller **50** may generate data driving control signals DCS and scan driving control signals SCS based on externally supplied synchronizing signals (not shown). The data driving control signals DCS may be supplied to the data driver **20** and the scan driving control signals SCS may be supplied to the scan driver **10**. The timing controller **50** may supply data DATA to the data driver **20** in accordance with externally supplied data (not shown).

The scan driver **10** may receive the scan driving control signals SCS from the timing controller **50**. The scan driver **10** may generate scan signals (not shown) based on the received scan driving control signals SCS. The generated scan signals may be sequentially supplied to the pixel unit **30** via the scan lines S**1** to Sn.

The data driver **20** may receive the data driving control signals DCS from the timing controller **50**. The data driver **20** may generate data signals (not shown) based on the received data DATA and data driving control signals DCS. Corresponding ones of the generated data signals may be supplied to the data lines D**1** to Dm in synchronization with respective ones of the scan signals being supplied to the scan lines S**1** to Sn.

The pixel unit **30** may be connected to a first power source ELVDD for supplying a first voltage VDD and a second power source ELVSS for supplying a second voltage VSS to the pixels **40**. The pixels **40**, together with the first voltage VDD signal and the second voltage VSS signal, may control the currents that flow through respective OLEDs in accordance with the corresponding data signals. The pixels **40** may thereby generate light based on the first voltage VDD signal, the second voltage VSS signal and the data signals.

In known light emitting displays, each of the pixels **40** may include a pixel circuit including at least one transistor for selectively supplying the respective data signal and the respective scan signal for selectively turning on and turning off the respective pixel **40** of the light emitting display.

Each pixel **40** of a light emitting display is to generate light of predetermined brightness in response to various values of the respective data signals. For example, when the same data signal is applied to all the pixels **40** of the display, it is generally desired for all the pixels **40** of the display to generate the same brightness. The brightness generated by each pixel **40** is not, however, only dependent on the data signal, but is also dependent on characteristics of each pixel **40**, e.g., threshold voltage of each transistor of the pixel circuit.

Generally, there are variations in threshold voltage and/or electron mobility from transistor to transistor such that different transistors have different threshold voltages and electron mobilities. The characteristics of transistors may also change over time and/or usage. For example, the threshold voltage and electron mobility of a transistor may be dependent on the on/off history of the transistor.

Therefore, in a light emitting display, the brightness generated by each pixel in response to respective data signals depends on the characteristics of the transistor(s) that may be included in the respective pixel circuit. Such variations in threshold voltage and electron mobility may prevent and/or hinder the uniformity of images being displayed. Thus, such variations in threshold voltage and electron mobility may also prevent the display of an image with a desired brightness.

Although it may be possible to at least partially compensate for differences between threshold voltages of the transistors included in the pixels by controlling the structure of the pixel circuits of the pixels **40**, circuits and methods capable of compensating for the variations in electron mobility are still needed. OLEDs that are capable of displaying images with uniform brightness irrespective of variations in electron mobility are also desired.

SUMMARY OF THE INVENTION

The present invention is therefore directed to a data driving circuit and a light emitting display using the same, which substantially overcome one or more of the problems due to the limitations and disadvantages of the related art.

It is therefore a feature of an embodiment of the present invention to provide a data driving circuit capable of driving pixels of a light emitting display to display images with uniform brightness, a light emitting display using the same, and a method of driving the light emitting display.

At least one of the above and other features and advantages of the present invention may be realized by providing a data driving circuit for driving a pixel of a light emitting display based on externally supplied first data for the pixel, wherein the pixel is electrically connectable to the driving circuit via at a data line, the data driving circuit including a gamma voltage unit generating a plurality of gray scale voltages, a digital-analog converter selecting, as a data signal, one of the plurality of gray scale voltages using k bits of the first data, k being a natural number, a decoder generating p bits of second data using the k bits of the first data, p being a natural number, a current sink receiving a predetermined current from the pixel during a first partial period of a complete period for driving the pixel based on the selected gray scale voltage, a voltage controller controlling a voltage value of the data signal using the second data and a compensation voltage generated based

on the predetermined current, and a switching unit supplying the data signal, with the controlled voltage value, to the pixel, the switching unit supplying the data signal during any partial period of the complete period elapsing after the first partial period of the complete period.

The data driving circuit may include a first transistor that may be disposed between the digital-analog converter and the switching unit, the digital-analog converter may be turned on during a predetermined time of the first partial period to transfer the data signal, with the controlled voltage value, to the switching unit, and a first buffer may be connected between the first transistor and the switching unit.

The decoder may convert the first data into a binary weighted value to generate the second data. The gamma voltage unit may include a plurality of distribution resistors for generating the gray scale voltages and distributing a reference supply voltage and a first supply voltage, and a second buffer for supplying the first supply voltage to the voltage controller.

The voltage controller may include p capacitors, each of the p capacitors may have a first terminal that is connected to an electrical path between the first transistor and the first buffer, second transistors respectively connected between a second terminal of each of the p capacitors and the second buffer, and third transistors respectively connected between the second terminal of each of the p capacitors and the current sink, the third transistors may be of a conduction type different from a conduction type of the second transistors. The decoder may turn on the second transistors during the first partial period, and may supply the first supply voltage to the respective second terminals of the p capacitors.

Capacitances of the p capacitors may be set to binary weighted values. The decoder may turn on and off the third transistors based on a number of bits of the second data and during the second partial period, the decoder selectively controls a supply of the compensation voltage to the respective second terminals of the p capacitors.

The current sink may include a current source providing the predetermined current, a first transistor disposed between the data line connected to the pixel and the voltage controller, the first transistor may be turned on during the first partial period, a second transistor disposed between the data line and the current source, the second transistor may be turned on during the first partial period, a capacitor storing the compensation voltage, and a buffer disposed between the first transistor and the voltage controller, the buffer selectively transferring the compensation voltage to the voltage controller.

A current value of the predetermined current may be equal to a current value of a minimum current flowing through the pixel when the pixel emits light with maximum brightness, and maximum brightness corresponds to a brightness of the pixel when a highest one of the plurality of reset gray scale voltages is applied to the pixel. The switching unit may include at least one transistor which is turned on during the second partial period. The switching unit may include two transistors which are connected so as to form a transmission gate.

The data driving circuit may include a shift register unit including at least one shift register for sequentially generating a sampling pulse, a sampling latch unit including at least one sampling latch for receiving the first data in response to the sampling pulse, and a holding latch unit including at least one holding latch for receiving the first data stored in the sampling latch and supplying the first data stored in the holding latch to the digital-analog converter and the decoder. The data driving circuit may include a level shifter for selectively modifying a voltage level of the first data stored in the holding latch and supplying the first data to the digital-analog converter and the decoder.

At least one of the above and other features and advantages of the present invention may be separately realized by providing a light emitting display that receives externally supplied first data and includes a pixel unit including a plurality of pixels connected to n scan lines, a plurality of data lines, and a plurality of emission control lines, a scan driver respectively and sequentially supplying, during each scan cycle, n scan signals to the n scan lines, and for sequentially supplying emission control signals to the plurality of emission control lines, and a data driver receiving a predetermined current from respective ones of the pixels selected by a first scan signal during a first partial period of a complete period, respectively controlling voltage values of data signals using respective compensation voltages generated based on the respective predetermined current and respective second data generated by converting the respective first data into second data using binary weighted values, and respectively supplying the data signals, with the controlled voltage values, to the data lines during a partial period of the complete period that elapses after the first partial period of the respective complete period associated with each of the respective pixels.

Each of the pixels may be connected to two of the n scan lines, and during each of the scan cycles, a first of the two scan lines receiving a respective one of the n scan signals before a second of the two scan lines receives a respective one of the n scan signals, and each of the pixels may include a first power source, an light emitter receiving current from the first power source, first and second transistors each having a first electrode connected to the respective one of the data lines associated with the pixel, the first and second transistors being turned on when the first of the two scan signals is supplied, a third transistor having a first electrode connected to a reference power source and a second electrode connected to a second electrode of the first transistor, the third transistor being turned on when the first of the two scans signal is supplied, a fourth transistor, the fourth transistor controlling an amount of current supplied to the light emitter, a first terminal of the fourth transistor being connected to the first power source, and a fifth transistor having a first electrode connected to a gate electrode of the fourth transistor and a second electrode connected to a second electrode of the fourth transistor, the fifth transistor being turned on when the first of the two scan signals is supplied such that the fourth transistor operates as a diode.

Each of the pixels may include a first capacitor having a first electrode connected to one of a second electrode of the first transistor or the gate electrode of the fourth transistor and a second electrode connected to the first power source, and a second capacitor having a first electrode connected to the second electrode of the first transistor and a second electrode connected to the gate electrode of the fourth transistor.

Each of the pixels may include a sixth transistor having a first terminal connected to the second electrode of the fourth transistor and a second terminal connected to the light emitter, the sixth transistor being turned off when the respective emission control signal is supplied, wherein the current sink receives the predetermined current from the pixel during a first partial period of one complete period for driving the pixel, the first partial period occurring before a second partial period of the complete period for driving the pixel, and the sixth transistor is turned on during the second partial period of the complete period for driving the pixel.

At least one of the above and other features and advantages of the present invention may be separately realized by pro-

viding a method for driving a light emitting display that includes selecting, as a data signal, one of a plurality of gray scale voltages based on k bits of externally supplied first data, k being a natural number, converting the first data into a binary weighted value and generating p bits of second data, p being a natural number, receiving predetermined current from a pixel selected by a scan signal during a first partial period of a complete period for driving the pixel based on the selected gray scale voltage, controlling a voltage value of the data signal using the generated second data and a compensation voltage generated when the predetermined current is supplied, and after controlling the voltage value of the data signal, supplying the data signal to the pixel, the data signal being supplied to the pixel during a second partial period of the complete period for driving the pixel.

The method may further involve generating the plurality of gray scale voltages by distributing a voltage between reference supply voltage and a first supply voltage among a plurality of voltage dividing resistors.

Controlling the voltage value of the data signal may include supplying a voltage value of the first power source to a first terminal of a each of a plurality of capacitors during the first, and selectively controlling a supply of the compensation voltage to the respective second terminals of the plurality of capacitors based on a number of bits of the second data, during a second partial period of the complete period.

At least one of the above and other features and advantages of the present invention may be separately realized by providing a data driving circuit for driving a light emitting display that includes selecting means for selecting, as a data signal, one of a plurality of gray scale voltages based on k bits of externally supplied first data, k being a natural number, converting means for converting the first data into a binary weighted value and generating p bits of second data, p being a natural number, receiving means for receiving predetermined current from a pixel selected by a scan signal during a first partial period of a complete period for driving the pixel based on the selected gray scale voltage, controlling means for controlling a voltage value of the data signal using the generated second data and a compensation voltage generated when the predetermined current is supplied, and after controlling the voltage value of the data signal, supplying the data signal to the pixel, the data signal being supplied to the pixel during a second partial period of the complete period for driving the pixel.

BRIEF DESCRIPTION OF THE DRAWINGS

These and other features and advantages of the invention will become apparent to those of ordinary skill in the art by describing in detail exemplary embodiments thereof with reference to the attached drawings in which:

FIG. **1** illustrates a schematic diagram of a known light emitting display;

FIG. **2** illustrates a schematic diagram of a light emitting display according to an embodiment of the present invention;

FIG. **3** illustrates a circuit diagram of an exemplary pixel employable in the light emitting display illustrated in FIG. **2**;

FIG. **4** illustrates exemplary waveforms employable for driving the pixel illustrated in FIG. **3**;

FIG. **5** illustrates a circuit diagram of another exemplary pixel employable in the light emitting display illustrated in FIG. **2**;

FIG. **6** illustrates a block diagram of a first embodiment of the data driving circuit illustrated in FIG. **2**;

FIG. **7** illustrates a block diagram of a second embodiment of the data driving circuit illustrated in FIG. **2**;

FIG. **8** illustrates a schematic diagram of a first embodiment of a connection scheme connecting a gamma voltage unit, a digital-to-analog converter, a decoder, a voltage controller, a switching unit and a current sink unit illustrated in FIG. **6**, and a pixel illustrated in FIG. **3**;

FIG. **9** illustrates exemplary waveforms employable for driving the pixel, the switching unit and the current sink unit illustrated in FIG. **8**;

FIG. **10** illustrates the connection scheme illustrated in FIG. **8** employing another embodiment of a switching unit; and

FIG. **11** illustrates a schematic diagram of a second embodiment of a connection scheme connecting the gamma voltage unit, the digital-to-analog converter, the decoder, the voltage controller, the switching unit and the current sink unit illustrated in FIG. **6**, and the pixel illustrated in FIG. **5**.

DETAILED DESCRIPTION OF THE INVENTION

Korean Patent Application No. 2005-0070438, filed on Aug. 1, 2005, in the Korean Intellectual Property Office, and entitled, "Data Driving Circuit and Driving Method of Organic Light Emitting Display Using the Same," is incorporated by reference herein in its entirety.

The present invention will now be described more fully hereinafter with reference to the accompanying drawings, in which exemplary embodiments of the invention are shown. The invention may, however, be embodied in different forms and should not be construed as limited to the embodiments set forth herein. Rather, these embodiments are provided so that this disclosure will be thorough and complete, and will fully convey the scope of the invention to those skilled in the art. Like reference numerals refer to like elements throughout.

Hereinafter, exemplary embodiments of the present invention will be described with reference to FIGS. **2** to **11**. In data driving circuits, data driving methods and light emitting displays employing one or more aspects of the invention, because a voltage of a data signal is reset using a compensation voltage generated when current sinks from a respective pixel, uniform images can be displayed regardless of electron mobility, threshold voltages, etc. of transistors.

FIG. **2** illustrates a schematic diagram of a light emitting display according to an embodiment of the present invention.

As shown in FIG. **2**, the light emitting display may include a scan driver **110**, a data driver **120**, a pixel unit **130** and a timing controller **150**. The pixel unit **130** may include a plurality of pixels **140**. The pixel unit **130** may include n×m pixels **140** arranged, for example, in n rows and m columns, where n and m may each be integers. The pixels **140** may be connected to scan lines S**1** to Sn, emission control lines E**1** to En and data lines D**1** to Dm. The pixels **140** may be respectively formed in the regions partitioned by the emission control lines En**1** to En and the data lines D**1** to Dm. The scan driver **110** may drive the scan lines S**1** to Sn and the emission control lines E**1** to En. The data driver **120** may drive the data lines D**1** to Dm. The timing controller **150** may control the scan driver **110** and the data driver **120**. The data driver **120** may include one or more data driving circuits **200**.

The timing controller **150** may generate data driving control signals DCS and scan driving control signals SCS in response to externally supplied synchronizing signals (not shown). The data driving control signals DCS generated by the timing controller **150** may be supplied to the data driver **120**. The scan driving control signals SCS generated by the timing controller **150** may be supplied to the scan driver **110**.

The timing controller **150** may supply first data DATA**1** to the data driver **120** in accordance with the externally supplied data (not shown).

The scan driver **110** may receive the scan driving control signals SCS from the timing controller **150**. The scan driver **110** may generate scan signals SS**1** to SSn based on the received scan driving control signals SCS and may sequentially and respectively supply the scan signals SS**1** to SSn to the scan lines S**1** to Sn. The scan driver **110** may sequentially supply emission control signals ES**1** to ESn to the emission control lines E**1** to En. Each of the emission control signals ES**1** to ESn may be supplied, e.g., changed from a low voltage signal to a high voltage signal, such that an "on" emission control signal, e.g., a high voltage signal, at least partially overlaps at least two of the scan signals SS**1** to SSn. Therefore, in embodiments of the invention, a pulse width of the emission control signals ES**1** to ESn may be equal to or larger than a pulse width of the scan signals SS**1** to SSn.

The data driver **120** may receive the data driving control signals DCS from the timing controller **150**. The data driver **120** may generate data signals DS**1** to DSm based on the received data driving control signals DCS and the first data DATA**1**. The generated data signals DS**1** to DSm may be supplied to the data lines D**1** to Dm in synchronization with the scan signals SS**1** to SSn supplied to the scan lines S**1** to Sn. For example, when the 1st scan signal SS**1** is supplied, the generated data signals DS**1** to DSm corresponding to the pixels **140**(**1**)(1 to m) may be synchronously supplied to the 1st to the m-th pixels in the 1st row via the data lines D**1** to Dm, and when the nth scan signal SSn is supplied, the generated data signals DS**1** to DSm corresponding to the pixels **140**(*n*)(1 to m) may be synchronously supplied to the 1st to the m-th pixels in the n-th row via the data lines D**1** to Dm.

The data driver **120** may supply predetermined currents to the data lines D**1** to Dm during a first period of one horizontal period 1H for driving one or more of the pixels **140**. For example, one horizontal period 1H may correspond to a complete period associated with one of the scan signals SS**1** to SSn and a corresponding one of the data signals DS**1** to DSm being supplied to the respective pixel **140** in order to drive the respective pixel **140**. The data driver **120** may supply predetermined voltages to the data lines D**1** to Dm during a second period of the one horizontal period. For example, one horizontal period 1H may correspond to a complete period associated with one of the scan signals SS**1** to SSn and a corresponding one of the data signals DS**1** to DSm being supplied to the respective pixel **140** in order to drive the respective pixel **140**. In embodiments of the invention, the data driver **120** may include at least one data driving circuit **200** for supplying such predetermined currents and predetermined voltages during the first and second periods of one horizontal period 1H. In the following description, the predetermined voltages that may be supplied to the data lines D**1** to Dm during the second period will be referred to as the data signals DS**1** to DSm.

The pixel unit **130** may be connected to a first power source ELVDD for supplying a first voltage VDD, a second power source ELVSS for supplying a second voltage VSS and a reference power source ELVref for supplying a reference voltage Vref to the pixels **140**. The first power source ELVDD, the second power source ELVSS and the reference power source ELVref may be externally provided. The pixels **140** may receive the first voltage VDD signal and the second voltage VSS signal, and may control the currents that flow through respective light emitting devices/materials, e.g., OLEDs, in accordance with the data signals DS**1** to DSm that may be supplied by the data driver **120** to the pixels **140**. The pixels **140** may thereby generate light components corresponding to the received first data DATA**1**.

Some or all of the pixels **140** may receive the first voltage VDD signal, the second voltage VSS signal and the reference voltage Vref signal from the respective first, second and reference power sources ELVDD, ELVSS and ELVref. The pixels **140** may compensate for a voltage drop in the first voltage VDD signal and/or threshold voltage(s) using the reference voltage Vref signal. The amount of compensation may be based on a difference between voltage values of the reference voltage Vref signal and the first voltage VDD signal respectively supplied by the reference power source ELVref and the first power source ELVDD. The pixels **140** may supply respective currents from the first power source ELVDD to the second power source ELVSS via, e.g., the OLEDs in response to the respective data signals DS**1** to DSm. In embodiments of the invention, each of the pixels **140** may have, for example, the structure illustrated in FIG. **3** or **5**.

FIG. **3** illustrates a circuit diagram of an nm-th exemplary pixel **140***nm* employable in the light emitting display illustrated in FIG. **2**. For simplicity, FIG. **3** illustrates the nm-th pixel that may be the pixel provided at the intersection of the n-th row of scan lines Sn and the m-th row of data lines Dm. The nm-th pixel **140***nm* may be connected to the m-th data line Dm, the n−1th and nth scan lines Sn−1 and Sn and the nth emission control line En. For simplicity, FIG. **3** only illustrates one exemplary pixel **140***nm*. In embodiments of the invention, the structure of the exemplary pixel **140***nm* may be employed for all or some of the pixels **140** of the light emitting display.

Referring to FIG. **3**, the nm-th pixel **140***nm* may include a light emitting material/device, e.g., OLEDnm, and an nm-th pixel circuit **142***nm* for supplying current to the associated light emitting material/device.

The nm-th OLEDnm may generate light of a predetermined color in response to the current supplied from the nm-th pixel circuit **142***nm*. The nm-th OLEDnm may be formed of, e.g., organic material, phosphor material and/or inorganic material.

In embodiments of the invention, the nm-th pixel circuit **142***nm* may generate a compensation voltage for compensating for variations within and/or among the pixels **140** such that the pixels **140** may display images with uniform brightness. The nm-th pixel circuit **142***nm* may generate the compensation voltage using a previously supplied scan signal of the scan signals SS**1** to SSn during each scan cycle. In embodiments of the invention, one scan cycle may correspond to scan signals SS**1** to SSn being sequentially supplied. Thus, in embodiments of the invention, during each cycle, the n−1th scan signal SSn−1 may be supplied prior to the nth scan signal SSn and when the n−1th scan signal SSn−1 is being supplied to the n−1th scan line of the light emitting display, the nm-th pixel circuit **142***nm* may employ the n−1th scan signal SSn−1 to generate a compensation voltage. For example, the second pixel in the second column, i.e., the pixel $\mathbf{140}_{22}$, may generate a compensation voltage using the first scan signal SS**1**.

The compensation voltage may compensate for a voltage drop in a source voltage signal and/or a voltage drop resulting from a threshold voltage of the transistor of the nm-th pixel circuit **142***nm*. For example, the nm-th pixel circuit **142***nm* may compensate for a voltage drop of the first voltage VDD signal and/or a threshold voltage of a transistor, e.g., a threshold voltage of a fourth transistor M**4***nm* of the pixel circuit **142***nm* based on the compensation voltage that may be generated using a previously supplied scan line during the same scan cycle.

In embodiments of the invention, the pixel circuit **142***nm* may compensate for a drop in the voltage of the first power source ELVDD and the threshold voltage of the fourth transistor M**4***nm* when the n−1th scan signal SSn−1 is supplied to the n−1th scan line Sn−1, and may charge the voltage corresponding to the data signal DSm when the nth scan signal SSn is supplied to the nth scan line Sn. In embodiments of the invention, the pixel circuit **142***nm* may include first to sixth transistors M**1***nm* to M**6***nm*, a first capacitor C**1***nm* and a second capacitor C**2***nm* to generate the compensation voltage and to drive the light emitting material/device.

A first electrode of the first transistor M**1***nm* may be connected to the data line Dm and a second electrode of the first transistor M**1***nm* may be connected to a first node N**1***nm*. A gate electrode of the first transistor M**1***nm* may be connected to the nth scan line Sn. The first transistor M**1***nm* may be turned on when the nth scan signal SSn is supplied to the nth scan line Sn. When the first transistor M**1***nm* is turned on, the data line Dm may be electrically connected to the first node N**1***nm*.

A first electrode of the first capacitor C**1***nm* may be connected to the first node N**1***nm* and a second electrode of the first capacitor C**1***nm* may be connected to the first power source ELVDD.

A first electrode of the second transistor M**2***nm* may be connected to the data line Dm and a second electrode of the second transistor M**2***nm* may be connected to a second electrode of the fourth transistor M**4***nm*. A gate electrode of a second transistor M**2***nm* may be connected to the nth scan line Sn. The second transistor M**2***nm* may be turned on when the nth scan signal SSn is supplied to the nth scan line Sn. When the second transistor M**2***nm* is turned on, the data line Dm may be electrically connected to the second electrode of the fourth transistor M**4***nm*.

A first electrode of the third transistor M**3***nm* may be connected to the reference power source ELVref and a second electrode of the third transistor M**3***nm* may be connected to the first node N**1***nm*. A gate electrode of the third transistor M**3***nm* may be connected to the n−1th scan line Sn−1. The third transistor M**3***nm* may be turned on when the n−1th scan signal SSn−1 is supplied to the n−1th scan line Sn−1. When the third transistor M**3***nm* is turned on, the reference voltage Vref may be electrically connected to the first node N**1***nm*.

A first electrode of the fourth transistor M**4***nm* may be connected to the first power source ELVDD and the second electrode of the fourth transistor M**4***nm* may be connected to a first electrode of the sixth transistor M**6***nm*. A gate electrode of the fourth transistor M**4***nm* may be connected to the second node N**2***nm*.

A first electrode of the second capacitor C**2***nm* may be connected to the first node N**1***nm* and a second electrode of the second capacitor C**2***nm* may be connected to the second node N**2***nm*.

In embodiments of the invention, the first and second capacitors C**1***nm* and C**2***nm* may be charged when the n−1th scan signal SSn−1 is supplied. In particular, the first and second capacitors C**1***nm* and C**2***nm* may be charged and the fourth transistor M**4***nm* may supply a current corresponding to a voltage at the second node N**2***nm* to the first electrode of the sixth transistor M**6***nm*.

A second electrode of the fifth transistor M**5***nm* may be connected to the second node N**2***nm* and a first electrode of the fifth transistor M**5***nm* may be connected to the second electrode of the fourth transistor M**4***nm*. A gate electrode of the fifth transistor M**5***nm* may be connected to the n−1th scan line Sn−1. The fifth transistor M**5***nm* may be turned on when the n−1th scan signal SSn−1 is supplied to the n−1th scan line Sn−1 so that current flows through the fourth transistor M**4***nm*. Therefore, the fourth transistor M**4***nm* may operate as a diode.

The first electrode of the sixth transistor M**6***nm* may be connected to the second electrode of the fourth transistor M**4***nm* and a second electrode of the sixth transistor M**6***nm* may be connected to an anode electrode of the nm-th OLEDnm. A gate electrode of the sixth transistor M**6***nm* may be connected to the nth emission control line En. The sixth transistor M**6***nm* may be turned off when an emission control signal ESn is supplied, e.g., a high voltage signal, to the nth emission control line En and may be turned on when no emission control signal, e.g., a low voltage signal, is supplied to the nth emission control line En.

In embodiments of the invention, the emission control signal ESn supplied to the nth emission control line En may be supplied to at least partially overlap both the n−1th scan signal SSn−1 that may be supplied to the n−1th scan line Sn−1 and the nth scan signal SSn that may be supplied to nth scan line Sn. Therefore, the sixth transistor M**6***nm* may be turned off when the n−1th scan signal SSn−1 is supplied, e.g., a low voltage signal is supplied, to the n−1th scan line Sn−1 and the n-th scan signal SSn is supplied, e.g., a low voltage signal is supplied, to the nth scan line Sn so that a predetermined voltage may be charged in the first and second capacitors C**1***nm* and C**2***nm*. The sixth transistor M**6***nm* may be turned on during other times to electrically connect the fourth transistor M**4***nm* and the nm-th OLEDnm to each other. In the exemplary embodiment shown in FIG. **3**, the transistors M**1***nm* to M**6***nm* are PMOS transistors, which may turn on when a low voltage signal is supplied to the respective gate electrode and may turn on when a high voltage signal is supplied to the respective gate electrode. However, the present invention is not limited to PMOS devices.

In the pixel illustrated in FIG. **3**, because the reference power source ELVref does not supply current to the pixels **140**, a drop in the voltage of the reference voltage Vref may not occur. Therefore, it is possible to maintain the voltage value of the reference voltage Vref signal uniform regardless of the positions of the pixels **140**. In embodiments of the invention, the voltage value of the reference voltage Vref may be equal to or different from the first voltage ELVDD.

FIG. **4** illustrates exemplary waveforms that may be employed for driving the exemplary nm-th pixel **140***nm* illustrated in FIG. **3**. As shown in FIG. **4**, each horizontal period 1H for driving the nm-th pixel **140***nm* may be divided into a first period and a second period. During the first period, predetermined currents (PCs) may respectively flow through the data lines D**1** to Dm. During the second period, the data signals DS**1** to DSm may be supplied to the respective pixels **140** via the data lines D**1** to Dm. During the first period, the respective PCs may be supplied from each of the pixel(s) **140** to a data driving circuit **200** that may be capable of functioning, at least in part, as a current sink. During the second period, the data signals DS**1** to DSm may be supplied from the data driving circuit **200** to the pixel(s) **140**. For simplicity, in the following description, it will be assumed that, at least initially, i.e., prior to any voltage drop that may result during operation of the pixels **140**, the voltage value of the reference voltage Vref signal is equal to the voltage value of the first voltage VDD signal.

Exemplary methods of operating the nm-th pixel circuit **142***nm* of the nm-th pixel **140***nm* of the pixels **140** will be described in detail with reference to FIGS. **3** and **4**. First, the n−1th scan signal SSn−1 may be supplied to the n−1th scan line Sn−1 to control the on/off operation of the m pixels that may be connected to the n−1th scan line Sn−1. When the scan

signal SSn−1 is supplied to the n−1th scan line Sn−1, the third and fifth transistors M3*nm* and M5*nm* of the nm-th pixel circuit **142***nm* of the nm pixel **140***nm* may be turned on. When the fifth transistor M5*nm* is turned on, current may flow through the fourth transistor M4*nm* so that the fourth transistor M4*nm* may operate as a diode. When the fourth transistor M4*nm* operates as a diode, the voltage value of the second node N2*nm* may correspond to a difference between the threshold voltage of the fourth transistor M4*nm* and the voltage of the first voltage VDD signal being supplied by the first power source ELVDD.

More particularly, when the third transistor M3*nm* is turned on, the reference voltage Vref signal from the reference power source ELVref may be applied to the first node N1*nm*. The second capacitor C2*nm* may be charged with a voltage corresponding to the difference between the first node N1*nm* and the second node N2*nm*. In embodiments of the invention in which the reference voltage Vref signal from the reference power source ELVref and the first voltage VDD from the first power source ELVDD may, at least initially, i.e., prior to any voltage drop that may result during operation of the pixels **140**, be equal, the voltage corresponding to the threshold voltage of the fourth transistor M4*nm* may be charged in the second capacitor C2*nm*. In embodiments of the invention in which a predetermined drop in voltage of the first voltage VDD signal occurs, the threshold voltage of the fourth transistor M4*nm* and a voltage corresponding to the magnitude of the voltage drop of the first power source ELVDD may be charged in the second capacitor C2*nm*.

In embodiments of the invention, during the period where the n−1th scan signal SSn−1 may be supplied to the n−1th scan line Sn−1, a predetermined voltage corresponding to the sum of the voltage corresponding to the voltage drop of the first voltage VDD signal and the threshold voltage of the fourth transistor M4*nm* may be charged in the second capacitor C2*nm*. By storing the voltage corresponding to a sum of the voltage drop of the first voltage VDD signal from the first power source ELVDD and the threshold voltage of the fourth transistor M4*nm* during operation of the respective n−1 pixel of in the m-th column, it is possible to later utilize the stored voltage to compensate for both the voltage drop of the first voltage VDD signal and the threshold voltage during operation of the respective nm-th pixel **140***nm*.

In embodiments of the invention, the voltage corresponding to the sum of the threshold voltage of the fourth transistor M4*nm* and the difference between the reference voltage signal Vref and the first voltage VDD signal may be charged in the second capacitor C2*nm* before the nth scan signal SSn is supplied to the nth scan line Sn. When the nth scan signal SSn is supplied to the nth scan line Sn, the first and second transistors M1*nm* and M2*nm* may be turned on. During the first period of one horizontal period, when the second transistor M2*nm* of the pixel circuit **142***nm* of the nm-th pixel **140***nm* is turned on, the PC may be supplied from the nm-th pixel **140***nm* to the data driving circuit **200** via the data line Dm. In embodiments of the invention, the PC may be supplied to the data driving circuit **200** via the first power source ELVDD, the fourth transistor M4*nm*, the second transistor M2*nm* and the data line Dm. A predetermined voltage may then be charged in the first and second capacitors C1*nm* and C2*nm* in response to the supplied PC.

The data driving circuit **200** may reset a voltage of a gamma voltage unit (not shown) based on a predetermined voltage value, i.e., compensation voltage that may be generated when the PC sinks, as described above. The reset voltage from the gamma voltage unit (not shown) may be used to generate the data signals DS**1** to DSm to be respectively supplied to the data lines D**1** to Dm.

In embodiments of the invention, the generated data signals DS**1** to DSm may be respectively supplied to the respective data lines D**1** to Dm during the second period of the one horizontal period. More particularly, e.g., the respective generated data signal DSm may be supplied to the respective first node N1*nm* via the first transistor M1*nm* during the second period of the one horizontal period. Then, the voltage corresponding to difference between the data signal DSm and the first power source ELVDD may be charged in the first capacitor C1*nm*. The second node N2*nm* may then float and the second capacitor C2*nm* may maintain the previously charged voltage.

In embodiments of the invention, during the period when the n−1 pixel in the m-th column is being controlled and the scan signal SSn−1 is being supplied to the previous scan line Sn−1, a voltage corresponding to the threshold voltage of the fourth transistor M4*nm* and the voltage drop of the first voltage VDD signal from the first power source ELVDD may be charged in the second capacitor C2*nm* of the nm-th pixel **140***nm* to compensate for the voltage drop of the first voltage VDD signal from the first power source ELVDD and the threshold voltage of the fourth transistor M4*nm*.

In embodiments of the invention, during the period when the n-th scan signal SSn is supplied to the n-th scan line Sn, the voltage of the gamma voltage unit (not shown) may be reset so that the electron mobility of the transistors included in the respective n-th pixels **140***n* associated with each data line D**1** to Dm may be compensated for and the respective generated data signals DS**1** to DSm may be supplied to the n-th pixels **140***n* using the respective reset gamma voltages. Therefore, in embodiments of the invention, non-uniformity in the threshold voltages of the transistors and the electron mobility may be compensated, and images with uniform brightness may be displayed. Processes for resetting the voltage of the gamma voltage unit will be described below.

FIG. **5** illustrates another exemplary embodiment of an nm-th pixel **140***nm*' employable by the light emitting display illustrated in FIG. **2**. The structure of the nm-th pixel **140***nm*' illustrated in FIG. **5** is substantially the same as the structure of the nm-th pixel **140***nm* illustrated in FIG. **3**, but for the arrangement of a first capacitor C1*nm*' in a pixel circuit **142***nm*' and respective connections to a first node N1*nm*' and a second node N2*nm*'. In the exemplary embodiment illustrated in FIG. **5**, a first electrode of the first capacitor C1*nm*' may be connected to the second node N2*nm*' and a second electrode of the first capacitor C1*nm*' may be connected to the first power source ELVDD. A first electrode of the second capacitor C2*nm* may be connected to the first node N1*nm*' and a second electrode of the second capacitor C2*nm* may be connected to the second node N2*nm*'. The first node N1*nm*' may be connected to the second electrode of the first transistor M1*nm*, the second electrode of the third transistor M3*nm* and the first electrode of the second capacitor C2*nm*. The second node N2*nm*' may be connected to the gate electrode of the fourth transistor M4*nm*, the second electrode of the fifth transistor M5*nm*, the first electrode of the first capacitor C1*nm*' and the second electrode of the second capacitor C2*nm*.

In the following description, the same reference numerals employed above in the description of the nm-th pixel **140***nm* shown in FIG. **3** will be employed to describe like features in the exemplary embodiment of the nm-th pixel **140***nm*' illustrated in FIG. **5**.

Exemplary methods for operating the nm-th pixel circuit **142***nm*' of the nm-th pixel **140***nm*' of the pixels **140** will be described in detail with reference to FIGS. **4** and **5**. First, during a horizontal period for driving the n−1 pixels **140**(*n*−1)(1 to m), i.e., the pixels arranged in the (n−1)th row, when the n−1th scan signal SSn−1 is supplied to the n−1th scan line Sn−1, the third and fifth transistors M**3***nm* and M**5***nm* of the n-th pixel(s) **140**(*n*)(1 to m), i.e., the pixels arranged in the n-th row, may be turned on.

When the fifth transistor M**5***nm* is turned on, current may flow through the fourth transistor M**4***nm* so that the fourth transistor M**4***nm* may operate as a diode. When the fourth transistor M**4***nm* operates as a diode, a voltage corresponding to a value obtained by subtracting the threshold voltage of the fourth transistor M**4***nm* from the first power source ELVDD may be applied to a second node N**2***nm*'. The voltage corresponding to the threshold voltage of the fourth transistor M**4***nm* may be charged in the first capacitor C**1***nm*'. As shown in FIG. **5**, the first capacitor C**1***nm*' may be provided between the second node N**2***nm*' and the first power source ELVDD.

When the third transistor M**3***nm* is turned on, the voltage of the reference power source ELVref may be applied to the first node N**1***nm*'. Then, the second capacitor C**2***nm* may be charged with the voltage corresponding to difference between a first node N**1***nm*' and the second node N**2***nm*'. During the period where the n−1th scan signal SSn−1 is supplied to the n−1th scan line Sn−1 and the first and second transistors M**1***nm* and M**2***nm* may be turned off, the data signal DSm may not be supplied to the nm-th pixel **140***nm'*.

Then, during the first period of the one horizontal period for driving the nm-th pixel **140***nm*', the scan signal SSn may be supplied to the nth scan line Sn and the first and second transistors M**1***nm* and M**2***nm* may be turned on. When the second transistor M**2***nm* is turned on, during the first period of the one horizontal period, the respective PC may be supplied from the nm-th pixel **140***nm*' to the data driving circuit **200** via the data line Dm. The PC may be supplied to the data driving circuit **200** via the first power source ELVDD, the fourth transistor M**4***nm*, the second transistor M**2***nm* and the data line Dm. In response to the PC, predetermined voltage may be charged in the first and second capacitors C**1***nm*' and C**2***nm*.

The data driving circuit **200** may reset the voltage of the gamma voltage unit using the compensation voltage applied in response to the PC to generate the data signal DS using the respectively reset voltage of the gamma voltage unit.

Then, during the second period of the one horizontal period for driving the nm-th pixel **140***nm*', the data signal DSm may be supplied to the first node N**1***nm*'. The predetermined voltage corresponding to the data signal DSm may be charged in the first and second capacitors C**1***nm*' and C**2***nm*.

When the data signal DSm is supplied, the voltage of the first node N**1***nm*' may fall from the voltage Vref of the reference power source ELVref to the voltage of the data signal DSm. At this time, as the second node N**2***nm*' may be floating, the voltage value of the second node N**2***nm*' may be reduced in response to the amount of voltage drop of the first node N**1***nm*'. The amount of reduction in voltage that may occur at the second node N**2***nm*' may be determined by the capacitances of the first and second capacitors C**1***nm*' and C**2***nm*.

When the voltage of the second node N**2***nm*' falls, the predetermined voltage corresponding to the voltage value of the second node N**2***nm*' may be charged in the first capacitor C**1***nm*'. When the voltage value of the reference power source ELVref is fixed, the amount of voltage charged in the first capacitor C**1***nm*' may be determined by the data signal DSm. That is, in the nm-th pixel **140***nm*' illustrated in FIG. **5**, because the voltage values charged in the capacitors C**1***nm*' and C**2***nm* may be determined by the reference power source ELVref and the data signal DSm, it may be possible to charge a desired voltage irrespective of the voltage drop of the first power source ELVDD.

In embodiments of the invention, the voltage of the gamma voltage unit may be reset so that the electron mobility of the transistors included in each of the pixels **140** may be compensated for and the respective generated data signal may be supplied using the reset gamma voltage. In embodiments of the invention, non-uniformity among the threshold voltages of the transistors and deviation in the electron mobility of the transistors may be compensated for, thereby enabling images with uniform brightness to be displayed.

FIG. **6** illustrates a block diagram of a first exemplary embodiment of the data driving circuit illustrated in FIG. **2**. For simplicity, in FIG. **6**, it is assumed that the data driving circuit **200** has j channels, where j is a natural number equal to or greater than 2.

As shown in FIG. **6**, the data driving circuit **200** may include a shift register unit **210**, a sampling latch unit **220**, a holding latch unit **230**, a decoder unit **240**, a digital-analog converter unit (hereinafter, referred to as a a DAC) **250**, a voltage controller unit **260**, a first buffer unit **270**, a current supply unit **280**, a selector **290** and a gamma voltage unit **300**.

The shift register unit **210** may receive a source shift clock SSC and a source start pulse SSP from the timing controller **150**. The shift register unit **210** may utilize the source shift clock SSC and the source start pulse SSP to sequentially generate j sampling signals while shifting the source start pulse SSP every one period of the source shift clock SSC. The shift register unit **210** may include j shift registers **2101** to **210***j*.

The sampling latch unit **220** may sequentially store the respective first data DATA**1** in response to sampling signals sequentially supplied from the shift register unit **210**. The sampling latch unit **220** may include j sampling latches **2201** to **220***j* in order to respectively store the j first data DATA**1-1** to DATA**1**-*j*. Each of the sampling latches **2201** to **220***j* may have a magnitude corresponding to a number of bits of the first data DATA**1**. For example, when the first data DATA**1** is k bits, each of the sampling latches **2201** to **220***j* may have a magnitude of k bits such that the sampling latches **2201** to **220***j* may respectively store k-bits of each of the j first DATA**1-1** to DATA**1**-*j*.

The holding latch unit **230** may receive the first data DATA**1** from the sampling latch unit **220** to store the first data DATA**1** when a source output enable SOE signal is input to the holding latch unit **230**. The holding latch unit **230** may supply the first data DATA**1** stored therein to the decoder unit **240** and/or the DAC unit **250** when the SOE signal is input. The holding latch unit **230** may include j holding latches **2301** to **230***j* in order to store the j first data DATA**1-1** to DATA**1**-*j*. Each of the holding latches **2301** to **230***j* may have a magnitude corresponding to the number of bits of the first data DATA**1**. For example, each of the holding latches **2301** to **230***j* may have a magnitude of k bits so that the k bits of each of the j first data DATA**1-1** to DATA**1**-*j* may be respectively stored.

The decoder unit **240** may include j decoders **2401** through **240***j*. Each of the decoders **2401** through **240***j* may receive k bits of the respective first data DATA**1** and may convert the k bits of the first data DATA**1** into p (p is a natural number) bits of second data DATA**2**. In embodiments of the invention, each of the decoders **2401** through **240***j* may generate p bits of second data DATA**2** using a binary weighted value.

In embodiments of the invention, the weighted value of the externally received first data DATA**1** may be determined to

allow the gamma voltage unit **300** to be set a predetermined voltage. For example, the number of bits of the first data DATA**1** allowing a desired gray scale voltage to be selected from a plurality of gray scale voltages may be determined. The plurality of gray scale voltages may be generated by the gamma voltage unit **300**. The decoders **2401** through **240***j* may convert k bits of the first data DATA**1**, corresponding to the gray scale voltages, into respective p bits of second data DATA**2-1** to DATA**2**-*j* using a binary weighted value. For example, the decoders **2401** through **240***j* may generate five bits of the second data DATA**2** using eight bits of the first data DATA**1**.

The current supply unit **280** may sink predetermined current PC from the respective pixel(s) **140** selected by one of the scan signals SS**1** to SSn. The current supply unit **280** may receive the sinking current via the respective one of the data lines D**1** through Dj, during the first period of each horizontal period.

In embodiments of the invention, the current supply unit **280** may sink an amount of current corresponding to a minimum amount of current that may be employed by the respective light emitter, e.g., OLED, to emit light of maximum brightness. Then, the current supply unit **280** may supply a predetermined compensation voltage to the voltage controller unit **260**. The compensation voltage may be generated while the respective predetermined current PC was sinking. In the exemplary embodiment illustrated in FIG. **6**, the current supply unit **280** includes j current sink units **2801** through **280***j*.

The gamma voltage unit **300** may generate predetermined gray scale voltages corresponding to the k bits of the first data DATA**1**. The gamma voltage unit **300**, as shown in FIG. **8**, may include a plurality of distribution or voltage dividing resistors R**1** through R/ and may generate 2^k gray scale voltages. The gray scale voltages generated by the gamma voltage unit **300** may be supplied to the DAC unit **250**.

The DAC unit **250** may include j DACs **2501** through **250***j*. The gray scale voltages generated by the gamma voltage unit **300** may be supplied to each of the j DACs **2501** through **250***j*. Each of the DACs **2501** through **250***j* may select, as a data signal DS, one of the gray scale voltages that may be supplied by the gamma voltage unit **300** based on the respective first data DATA**1-1** to DATA**1**-*j* supplied from the respective holding latch units **2301** through **230***j*. For example, the DACs **2501** to **250***j* may respectively select, as a data signal DS, one of the gray scale voltages that may be supplied by the gamma voltage unit **300** based on a number of bits of the respective first data DATA**1-1** to DATA**1**-*j*.

The voltage controller unit **260** may include j voltage controllers **2601** through **260***j*.

The voltage controllers **2601** through **260***j* may each receive a compensation voltage, e.g., voltage supplied via the respective current sink unit **2801-280***j* or the second data DATA**2**, and a third supply voltage signal VSS'. In embodiments of the invention, a same power source or a different power source may be employed for supplying the second voltage VSS signal and the third supply voltage VSS' signal. The third supply voltage VSS' signal may be supplied to a terminal of the gamma voltage unit **300**. The voltage controllers **2601** through **260***j*, which may receive the compensation voltage and/or the second data DATA**2**, and the third supply voltage VSS' signal, may control a voltage value of the selected data signal DS so that variations among the pixels **140**, such as, variations due to electron mobility, threshold voltage, etc. of transistors included in the respective pixels **140** may be compensated for.

The first buffer unit **270** may supply the respective data signal DS to the selector **290**. As discussed above, the voltage of the respective data signal may be controlled by the voltage control unit **260**. In embodiments of the invention, the first buffer unit **270** may include j first buffers **2701** through **270***j*.

The selector **290** may control electrical connections between the data lines D**1** to Dj and the first buffers **2701** to **270***j*. The selector **290** may electrically connect the data lines D**1** to Dj and the first buffers **2701** to **270***j* to each other during the second period of the one horizontal period. In embodiments of the invention, the selector **290** may electrically connect the data lines D**1** to Dj and the first buffers **2701** to **270***j* to each other only during the second period. During periods other than the second period, the selector **290** may keep the data lines D**1** to Dj and the first buffers **2701** to **270***j* electrically disconnected from each other.

The selector **290** may include j switching units **2901** to **290***j*. The generated respective data signals DS**1** to DSj may be respectively supplied from the first buffers **2701** to **270***j* to the data lines D**1** to Dj via the switching units **2901** to **290***j*. In embodiments of the invention, the selection unit **290** may employ other types of switching units. FIG. **10** illustrates another exemplary embodiment of a switching unit switching unit **290***j*' that may be employed by the selector **290**.

As shown in FIG. **7**, in a second exemplary embodiment, the data driving circuit **200** may include a level shifter **310** that is connected to the holding latch unit **230**. The level shifter **310** may include level registers **3101** to **310***j* and may raise the voltage of the first data DATA**1** that may be supplied from the holding latch unit **230** and may supply the level-shifted result to the DAC unit **250** and the decoder unit **240**. When the data (not shown) being supplied from an external system to the data driving circuit **200** has high voltage levels, circuit components with high voltage resistant properties should generally be provided, thus, increasing the manufacturing cost. In embodiments of the invention, the data being supplied from an external system to the data driving circuit **200** may have low voltage levels and the low voltage level may be transitioned to a high voltage level by the level shifter **310**.

FIG. **8** illustrates a first embodiment of a connection scheme for connecting the gamma voltage unit **300**, the DAC **250***j*, the decoder **240***j*, the voltage controller **260***j*, the switching unit **290***j*, the current sink unit **280***j*, and a pixel **140***nj*. For simplicity, FIG. **8** only illustrates one channel, i.e., the jth channel and it is assumed that the data line Dj is connected to an nj-th pixel **140***nj* according to the exemplary embodiment of the pixel **140***nm* illustrated in FIG. **3**.

As shown in FIG. **8**, the gamma voltage unit **300** may include a plurality of distribution resistors R**1** to R/. The distribution resistors R**1** to R/ may be disposed between the reference supply voltage Vref and the third supply voltage VSS'. The distribution resistors R**1** to R/ may distribute or divide a voltage supplied thereto. For example, the distribution resistors R**1** to R/ may distribute or divide a voltage between the reference supply voltage Vref and the third supply voltage VSS', and may generate a plurality of gray scale voltages V**0** through $V2^K-1$. The distribution resistors R**1** to R/ may supply the generated gray scale voltages V**0** through $V2^K-1$ to the DAC **250***j*. The gamma voltage unit **300** may supply the third supply voltage VSS' to the voltage controller **260***j* via a third buffer **301**.

The DAC **250***j* may select, as a data signal DS, one of the gray scale voltages V**0** through $V2^K-1$, based on a number of the bits of the first data DATA**1** and may supply the selected voltage to a first buffer **270***j*.

As shown in FIG. **8**, a transistor, e.g., forty-first transistor M**41**, which may be controlled by a third control signal CS**3**, may be disposed between the DAC **250***j* and the first buffer

270*j*. In such embodiments, the forty-first transistor M41 may be turned on at a predetermined time during the first period of the horizontal period for driving the pixel 140*nj* and the forty-first transistor M41 may supply the data signal DSj supplied from the DAC 250 to the first buffer 270*j*. More particularly, for example, the third control signal CS3 may rise after a second control signal CS2, which will be described below, and may fall at the same time as the second control signal CS2.

The current sink unit 280*j* may include a twelfth transistor M12*j* and a thirteenth transistor M13*j*, a current source Imaxj, a third capacitor C3*j*, a third node N3*j*, a ground voltage source GND and a second buffer 281. The twelfth transistor M12*j* and the thirteenth transistor M13*j* may be controlled by the second control signal CS2. The current source Imaxj may be connected to a first electrode of the thirteenth transistor M13*j*. The third capacitor C3*j* may be connected between the third node N3*j* and the ground voltage source GND. The second buffer 281*j* may be connected between the third node N3*j* and the voltage controller 260*j*.

A gate electrode of the twelfth transistor M12*j* may be connected to a gate electrode of the thirteenth transistor M13*j*. A second electrode of the twelfth transistor M12*j* may be connected to a second electrode of the thirteenth transistor M13*j* and the data line Dj. A first electrode of the twelfth transistor M12*j* may be connected to the second buffer 281. The twelfth transistor M12*j* and the thirteenth transistor M13*j* may be turned on during the first period of each horizontal period 1H. The twelfth transistor M12*j* and the thirteenth transistor M13*j* may be turned off during the second period of the horizontal period 1H. The second control signal CS2 may control the on/off state of the twelfth transistor M12*j* and the thirteenth transistor M13*j*.

During the first period of one horizontal period 1H, the current source Imaxj may receive, from the pixel 140*nj*, at least a minimum amount of current that may be supplied to the light emitter, e.g., OLEDnj, for the pixel 140*nj* to emit light with maximum brightness. As discussed above, the second control signal CS2 may control the twelfth transistor M12*j* and the thirteenth transistor M13*j* to be on during the first period, thereby allowing the predetermined current PC to flow from the pixel 140*nj* to the current sink unit 280*j*.

The third capacitor C3*j* may store a compensation voltage that may be applied to the third node N3*j* when the current from the pixel 140*nj* sinks to the current source Imaxj. The third capacitor C3*j* may store the compensation voltage applied to the third node N3*j* during the first period of one horizontal period 1H, and may maintain the compensation voltage at the third node N3*j* stable even when the twelfth transistor M13 and the thirteenth transistor M13 are turned off.

The second buffer 281*j* may transfer the compensation voltage applied to the third node N3*j* to the voltage controller 260*j*.

The decoder 240*j* may receive and may convert k bits of the first data DATA1 into p bits of second data DATA2 using a binary weighted value. The decoder 240*j* may supply an initialization signal (not shown) to the voltage controller 260*j* during the first period of the horizontal period 1H and the decoder 240*j* may supply the p bits of second data DATA2 to the voltage controller 260*j* during the second period of the same horizontal period 1H. In the following description of exemplary embodiments, for simplicity, it will be assumed that the p bits are 5 bits. In embodiments of the invention, p may be any integer greater than or equal to zero.

The voltage controller 260*j* may receive the compensation voltage and/or the second data DATA2, and the third supply voltage VSS' and may control the voltage value of the data signal DSj. In the description of exemplary embodiments, reference term "p" will be equal to five, however, "p" may be any integer. To control the voltage value of the data signal DSj, the voltage controller 260*j* may include p capacitors Cj, 2Cj, 4Cj, 8Cj and 16Cj, p PMOS transistors M31*j*, M32*j*, M33*j*, M34*j* and M35*j* and p NMOS transistors M21*j*, M22*j*, M23*j*, M24*j* and M25*j*. The capacitors Cj, 2Cj, 4Cj, 8Cj and 16Cj may be connected to an electrical path connecting the forty-first transistor M41 and the first buffer 270*j*. The p PMOS transistors M31*j*, M32*j*, M33*j*, M34*j* and M35*j* may be connected the third buffer 301 and the p capacitors Cj, 2Cj, 4Cj, 8Cj and 16Cj, respectively. The p NMOS transistors M21*j*, M22*j*, M23*j*, M24*j* and M25*j* may be connected between the second buffer 281*j* and the p capacitors Cj, 2Cj, 4Cj, 8Cj and 16Cj, respectively.

Capacitance values of the p capacitors Cj, 2Cj, 4Cj, 8Cj and 16Cj may be relative to each other such that the capacitances of the p capacitors may increase along the order of 2^0, 2^1, 2^2, 2^3 and 2^4, respectively. For example, the capacitances of the p capacitors Cj, 2Cj, 4Cj, 8Cj and 16Cj may have respective binary weighted values in accordance with the second data DATA2.

The p PMOS transistors M31*j*, M32*j*, M33*j*, M34*j* and M35*j* may be respectively disposed between the p capacitors Cj, 2Cj, 4Cj, 8Cj and 16Cj and the third buffer 301. The p PMOS transistors M31*j*, M32*j*, M33*j*, M34*j* and M35*j* may be turned on when the initialization signal (not shown) is supplied from the decoder 240*j*, and the p PMOS transistors M31*j*, M32*j*, M33*j*, M34*j* and M35*j* may respectively set a voltage of a terminal of the p capacitors Cj, 2Cj, 4Cj, 8Cj and 16Cj to the third supply voltage VSS'.

The p NMOS transistors M21*j*, M22*j*, M23*j*, M24*j* and M25*j* may be respectively disposed between each of the p capacitors Cj, 2Cj, 4Cj, 8Cj and 16Cj and the second buffer 281*j*. The p NMOS transistors M21*j*, M22*j*, M23*j*, M24*j* and M25*j* may be turned on or off during the second period of one horizontal period 1H for driving the pixel 140*nj* based on the second data DATA2 generated from the decoder 240*j*. The p NMOS transistors M21*j*, M22*j*, M23*j*, M24*j* and M25*j* may be controlled to select the respective one/ones of the p capacitors Cj, 2Cj, 4Cj, 8Cj and 16Cj based on bit weighted values of the second data DATA2. For example, if the bits of the second data DATA2 generated by the decoder 240*j* are set to "00011", the twenty-fourth transistor M24*j* and the twenty-fifth transistor M25 are turned on to apply the compensation voltage, e.g., voltage stored in the third capacitor C3*j*, to terminals of the respective first and second ones, e.g., Cj and 2Cj, of the p capacitors. In such embodiments, if bits corresponding to 2^0 and 2^1 have a value "1", the on/off state of the p NMOS transistors M21*j*, M22*j*, M23*j*, M24*j* and M25*j* may be controlled so that a compensation voltage may be applied to respective terminals of the first and second ones Cj and 2Cj of the p capacitors Cj, 2Cj, 4Cj, 8Cj and 16Cj. As discussed above, in embodiments of the invention, the first and second ones Cj and 2Cj of the p capacitors Cj, 2Cj, 4Cj, 8Cj and 16Cj, may have capacitances corresponding to 2^0 and 2^1.

In embodiments of the invention, the voltage value of the data signal DSj applied to the electrical path between the forty-first transistor M41*j* and the first buffer 270*j* may be increased or decreased in accordance with the compensation voltage that may be applied to respective terminals of the p capacitors Cj, 2Cj, 4Cj, 8Cj and 16Cj. More particularly, any increase or decrease in the voltage value of the data signal DSj applied to the electrical path between the forty-first transistor M41*j* and the first buffer 270*j* (and later to the data line Dj) may depend on the voltage value of the compensation volt-

age. Because the voltage value of the data signal DSj may be controlled with the applied compensation voltage, the voltage value of the data signal DSj may be controlled so that variations among the pixels **140** may be compensated for and the pixel unit **130** can display a uniform image.

For example, because the voltage value of the data signal DSj may be controlled with the applied compensation voltage, variations in electron mobility and/or threshold voltages of transistors included in the pixel **140***nj* may be compensated for. In embodiments of the invention, because the data driving circuit **200** may control the voltage value of the data signals DS using a compensation voltage generated based on characteristics, e.g., electron mobility, threshold voltage, etc., of the respective pixels **140**, the data driving circuit may control the voltage value of the respective data signal DS being supplied to the respective pixels **140** and may can compensate for variations in electron mobility of the transistors.

As shown in FIG. **8**, the first buffer **270***j* may transfer the data signal DSj applied to the electrical connection between the forty-first transistor M**41***j* and the first buffer **270***j* to the switching unit **290***j*.

The switching unit **290***j* may include an eleventh transistor M**11***j*. The eleventh transistor M**11***j* may be controlled by the first control signal CS**1**, as shown in FIGS. **8** and **9**. In embodiments of the invention, the eleventh transistor M**11***j* may be turned on during the second period of each horizontal period 1H for driving each of the n pixels in the j-th channel. In such embodiments, the eleventh transistor M**11***j* may be turned off during the first period of each horizontal period 1H for driving each of the n pixels in the j-th channel. Thus, the data signal DSj may supplied to the data line Dj during the second period of the horizontal period 1H and may not be supplied during other periods, e.g., the first period, of a single horizontal period 1H. In embodiments of the invention, the data signal DSj may only be supplied during the second horizontal period of a single horizontal period 1H. In embodiments of the invention, the data signal DSj may never be supplied to the data line Dj during the first period of a single horizontal period 1H.

FIG. **9** illustrates exemplary waveforms employable for driving the pixel, the switching unit and the current sink unit illustrated in FIG. **8**. Exemplary methods for controlling the voltage of data signals DS respectively supplied to the pixels **140** will be described in detail with reference to FIGS. **8** and **9**. In the exemplary embodiment illustrated in FIG. **8**, the pixel **140***nj* and the pixel circuit **142***nj*, according to the exemplary embodiment illustrated in FIG. **3**, is provided. In the following description, the same reference numerals employed above in the description of the nm-th pixel **140***nm* shown in FIG. **3** will be employed to describe like features in the exemplary embodiment of the nj-th pixel **140***nj* illustrated in FIG. **8**.

First, the scan signal SSn−1 may be supplied to the n−1th scan line Sn−1. When the scan signal SSn−1 is supplied to the n−1th scan line Sn−1, the third and fifth transistors M**3***nj* and M**5***nj* may be turned on. The voltage value obtained by subtracting the threshold voltage of the fourth transistor M**4***nj* from the first power source ELVDD may then be applied to a second node N**2***nj* and the voltage of the reference power source ELVref may be applied to a first node N**1***nj*. The voltage corresponding to the voltage drop of the first power source ELVDD and the threshold voltage of the fourth transistor M**4***nj* may then be charged in the second capacitor C**2***nj*.

The voltages applied to the first node N**1***nj* and the second node N**2***nj* may be represented by EQUATION1 and EQUATION2.

$$V_{N1}=Vref \quad \text{[EQUATION1]}$$

$$V_{N2}=ELVDD-|V_{thM4}| \quad \text{[EQUATION2]}$$

In EQUATION1 and EQUATION2, V_{N1}, V_{N2}, and V_{thM4} represent the voltage applied to the first node N**1***nj*, the voltage applied to the second node N**2***nj*, and the threshold voltage of the fourth transistor M**4***nj*, respectively.

From the time when the scan signal SSn−1 is supplied to the n−1th scan line Sn−1 is turned off, e.g., changed from a low voltage signal to a high voltage signal, to the time when the scan signal SSn is supplied, e.g., changed from a high voltage signal to a low voltage signal, to the nth scan line Snj, the first and second nodes N**1***nj* and N**2***nj* may be floating. Therefore, the voltage value charged in the second capacitor C**2***nj* may not change during that time.

The n-th scan signal SSn may then be supplied to the nth scan line Sn so that the first and second transistors M**1***nj* and M**2***nj* may be turned on. When the scan signal SSn is being supplied to the nth scan line Sn, during the first period of the one horizontal period when the n-th scan line Sn is being driven, the 12th and 13th transistors M**12***j* and M**13***j* may be turned on. When the 12th and 13th transistors M**12***j* and M**13***j* are turned on, the current that may flow through the current source Imaxj via the first power source ELVDD, the fourth transistor M**4***nj*, the second transistor M**2***nj*, the data line Dj, and the 13th transistor M**13***j* may sink.

When current flows through the current source Imaxj via the first power source ELVDD, the fourth transistor M**4***nj* and the second transistor M**2***nj*, EQUATION3 may apply.

$$Imax=\frac{1}{2}\mu_p C_{ox}\frac{W}{L}(ELVDD-V_{N2}-|V_{thM4}|)^2 \quad \text{[EQUATION3]}$$

In EQUATION3, μ, Cox, W, and L represent the electron mobility, the capacity of an oxide layer, the width of a channel, and the length of a channel, respectively.

The voltage applied to the second node N**2***nj* when the current obtained by EQUATION3 flows through the fourth transistor M**4***nj* may be represented by EQUATION4.

$$V_{N2}=ELVDD-\sqrt{\frac{2Imax}{\mu_p C_{ox}}\frac{L}{W}}-|V_{thM4}| \quad \text{[EQUATION4]}$$

The voltage applied to the first node N**1***nj* may be represented by EQUATION5 by the coupling of the second capacitor C**2***nj*.

$$V_{N1}=Vref-\sqrt{\frac{2Imax}{\mu_p C_{ox}}\frac{L}{W}}=V_{N3} \quad \text{[EQUATION5]}$$

In EQUATION5, the voltage V_{N1} may correspond to the voltage applied to the first node N**1***nj* and the voltage V_{N3} may correspond to the voltage applied to the third node N**3***j*. In embodiments of the invention, when current sinks by the current source Imaxj, a voltage satisfying EQUATION5 may be applied to the third node N**3***j*.

As seen in EQUATION5, the voltage applied to the third node N**3***j* may be affected by the electron mobility of the transistors included in the pixel **140***nj*, which is supplying current to the current source Imaxj. Therefore, the voltage value applied to the third node N**3***j* when the current is being

supplied to the current source Imaxj may vary in each of the pixels **140**, e.g., when the electron mobility varies in each of the pixels **140**.

During the first period of a horizontal period 1H for driving each of the pixels **140**, the DAC **250** may select an h-th one of f gray scale voltages based on the first data DATA**1** for respective pixels, where h and f are natural numbers. For example, the DAC **250***j* may select the h-th one of f gray scale voltages corresponding to the first data DATA**1** for the nj-th pixel **140***nj*. Then, when the forty-first transistor M**41** is turned on, the DAC **250***j* together with the voltage controller **260***j* may selectively apply the selected h-th one of the f gray scale voltages, as the data signal DSj, to the electrical connection between the forty-first transistor M**41***j* and the first buffer **270***j*. A voltage applied to the electrical connection between the forty-first transistor M**41** and the first buffer **270***j* may be expressed by EQUATION6.

$$V_L = Vref - \frac{h}{f}(Vref - VSS) \quad \text{[EQUATION6]}$$

Meanwhile, as discussed above, the decoder **240***j* may supply an initialization signal during the first period of each horizontal period 1H. The initialization signal may turn on the thirty-first transistor M**31***j*, the thirty-second transistor M**32***j*, the thirty-third transistor M**33***j*, the thirty-fourth transistor M**34***j* and the thirty-fifth transistor M**35***j*. Thus, during the first period of each horizontal period 1H, a voltage of a terminal of each of the p capacitors Cj, **2**Cj, **4**Cj, **8**Cj and **16**Cj may be set to a voltage of the third supply voltage VSS'. In embodiments of the invention, the voltage value of the third supply voltage VSS' may be set lower than the voltage value of the reference supply voltage Vref. For example, the third supply voltage VSS' may be set to an average voltage of compensation voltages that may be generated by the pixels **140** included in the pixel unit **130**.

After the voltage of the terminal of each of the p capacitors CJ, **2**Cj, **4**Cj, **8**Cj and **16**Cj is set to the third supply voltage VSS', during the second period of the horizontal period, a twenty-first transistor M**21***j*, a twenty-second transistor M**22***j*, a twenty-third transistor M**23***j*, a twenty-fourth transistor M**24***j* and a twenty-fifth transistor M**25***j* may be turned on or off in accordance with the second data DATA**2** that may be supplied from the decoder **240***j*. The decoder **240***j* may control the on/off state of the twenty-first transistor M**21***j*, the twenty-second transistor M**22***j*, the twenty-third transistor M**23***j*, the twenty-fourth transistor M**24***j*, and the twenty-fifth transistor M**25***j*. In particular, the decoder **240***j* may control the on/off state of the twenty-first transistor M**21***j*, the twenty-second transistor M**22***j*, the twenty-third transistor M**23***j*, the twenty-fourth transistor M**24***j*, and the twenty-fifth transistor M**25***j* to obtain a value approximating to a value of h/f in EQUATION6.

For example, if the bits of the second data DATA**2** generated by the decoder **240***j* are set to "00011", the twenty-fourth transistor M**24***j* and the twenty-fifth transistor M**25***j* may be turned on to apply a compensation voltage to a terminal of each of the first and second ones Cj and **2**Cj of the p capacitors. In this example, because the compensation voltage may be applied to a terminal of each of the first and second ones Cj and **2**Cj of the p capacitors, EQUATION7 can be deduced.

$$\frac{C + 2C}{C + 2C + 4C + 8C + 16C} \equiv \frac{h}{f} \quad \text{[EQUATION7]}$$

More particularly, because the second data DATA**2** may be derived from the first data DATA**1**, a value satisfying EQUATION7 approximates the value of h/f.

Meanwhile, if the compensation voltage is applied to at least one of the p capacitors Cj, **2**Cj, **4**Cj, **8**Cj and **16**Cj, a voltage of the electrical connection between the forty-first transistor M**41** and the first buffer **270***j* may be expressed by EQUATION8.

$$\begin{aligned} V_L &= Vref - \frac{h}{f}(Vref - VSS) + Vboost \quad \text{[EQUATION8]} \\ Vboost &= \frac{h}{f}(V_{N3} - VSS) \\ &= Vref - \frac{h}{f}(Vref - V_{N3}) \\ &= Vref - \frac{h}{f}\sqrt{\frac{2Imax}{\mu_p C_{OX}}\frac{L}{W}} \end{aligned}$$

A voltage satisfying EQUATION8 may be supplied to the eleventh transistor M**11***j* via the first buffer **270***j*. During the second period of the one horizontal period 1H, because the eleventh transistor M**11***j* may be turned on, the voltage supplied to the first buffer **270***j* may be supplied to the first node N**1***nj* via the eleventh transistor M**11***j*, the data line Dj, and the first transistor M**1***nj*. The voltage satisfying EQUATION8 may be supplied to the first node N**1***nj*. A voltage applied to the second node N**2***nj* by coupling of the second capacitor C**2***nj* can be expressed by EQUATION9.

$$V_{N2} = ELVDD - \frac{h}{f}\sqrt{\frac{2Imax}{\mu_p C_{OX}}\frac{L}{W}} - |V_{thM4}| \quad \text{[EQUATION9]}$$

Here, current flowing through the fourth transistor M**4***nj* may be expressed by EQUATION10.

$$\begin{aligned} I_{N4} &= \frac{1}{2}\mu_p C_{OX}\frac{W}{L}(ELVDD - V_{N2} - |V_{thM4}|)^2 \quad \text{[EQUATION10]} \\ &= \frac{1}{2}\mu_p C_{OX}\frac{W}{L}\left(\begin{array}{c} ELVDD - \\ ELVDD - \\ \left(\frac{h}{f}\sqrt{\frac{2Imax}{\mu_p C_{OX}}\frac{L}{W}} - \right) \\ |V_{thM4}| \\ V_{thM4} \end{array}\right)^2 \\ &= \left(\frac{h}{f}\right)^2 Imax \end{aligned}$$

Referring to EQUATION10, in embodiments of the invention, current flowing through the fourth transistor M**4***nj* may depend on the respective data signal DS supplied to the respective pixel **140** and more particularly, the gray scale voltage generated by the voltage controller **260***j*. Therefore, in embodiments of the invention, by supplying a current based on a compensation voltage generated by current sink-

ing from the respective pixel **140***nj*, a desired current may be selected and supplied as the respective data signal DS, irrespective of threshold voltage, electron mobility, etc. of the transistors, e.g., M**4***nj*, of the respective pixel. Thus, embodiments of the invention enable uniform images to be displayed irrespective of variations in electron mobility and threshold voltage within and among the pixels **140** of the pixel unit **130**.

In embodiments of the invention, as discussed above, different switching units may be employed. FIG. **10** illustrates the connection scheme illustrated in FIG. **8** employing another embodiment of a switching unit **290***j*'. The exemplary connection scheme illustrated in FIG. **10** is substantially the same as the exemplary connection scheme illustrated in FIG. **8**, but for another exemplary embodiment of the switching unit **290***j*'. In the following description, the same reference numerals employed above will be employed to describe like features in the exemplary embodiment illustrated in FIG. **10**.

As shown in FIG. **10**, another exemplary switching unit **290***j*' may include eleventh and fourteenth transistors M**11***j*, M**14***j* that may be connected to each other in the form of a transmission gate. The 14th transistor M**14***j*, which may be a PMOS type transistor, may receive the second control signal CS**2**. The eleventh transistor M**11***j*, which may be a NMOS type transistor, may receive the first control signal CS**1**. In such embodiments, when the polarity of the first control signal CS**1** is opposite to the polarity of the second control signal CS**2**, the eleventh and fourteenth transistors M**11***j* and M**14***j* may be turned on and off at the same time.

In embodiments of the invention in which the eleventh and fourteenth transistors M**11***j* and M**14***j* may be connected to each other in the form of the transmission gate. In such embodiments, a voltage-current characteristic curve may be in the form of a straight line and switching error may be minimized.

FIG. **11** illustrates a second embodiment of a connection scheme for connecting the gamma voltage unit **300**, the DAC **250***j*, the decoder **240***j*, the voltage controller **260***j*, the switching unit **290***j*, the current sink unit **280***j*, and a pixel **140***nj*'. For simplicity, FIG. **11** only illustrates one channel, i.e., the jth channel and it is assumed that the data line Dj is connected to the nj-th pixel **140***nj*' according to the exemplary embodiment of the pixel **140***nm*' illustrated in FIG. **5**.

Methods for driving pixels **140** of a light emitting display will be described in detail with reference to FIGS. **9** and **11**. First, when a scan signal SSn−1 is supplied to the n−1th scan line Sn−1, a voltage satisfying EQUATION1 and EQUATION2 may be applied to a first node N**1***nj*' and a second node N**2***nj*', respectively.

The n-th scan signal may be applied to the n-th scan line Sn. During the first period of a horizontal period 1H for driving the nj-th pixel **140***nj*', w when the twelfth transistor M**12***j* and the thirteenth transistor M**13***j* may be turned on, current flowing through the fourth transistor M**4***j* may satisfy EQUATION3 and a voltage applied to the second node N**2***nj*' may satisfy EQUATION4. In the following description, the same reference numerals employed above in the description of the exemplary embodiment illustrated in FIG. **8** will be employed to describe like features in the exemplary embodiment of the connection scheme illustrated in FIG. **11**.

A voltage applied to the first node N**1***nj*' by coupling of the second capacitor C**2***nj* can be expressed by EQUATION11.

$$V_{N1} = Vref - \left(\frac{C1 + C2}{C2}\right)\sqrt{\frac{2Imax}{\mu_p C_{ox}}\frac{L}{W}} = V_{N3} \quad \text{[EQUATION11]}$$

Meanwhile, during the first period of the horizontal period for driving the nj-th pixel **140***nj*', the DAC **250***j* may select an h-th one of f gray scale voltages in accordance with the first data DATA**1**, where h and f are natural numbers. The DAC **250***j* may also supply a gray scale voltage satisfying EQUATION6. The selected h-th one of the f gray scale voltages may be supplied to first buffer **270***j* when the forty-first transistor M**41** is turned on. The selected h-th one of the f gray scale voltages may be selected, as a respective data signal DSj to be supplied to the pixel **140***nj*' via the data line Dj.

The decoder **240***j* may supply an initialization signal to the thirty-first transistor M**31***j*, the thirty-second transistor M**32***j*, the thirty-third transistor M**33***j*, the thirty-fourth transistor M**34***j* and the thirty-fifth transistor M**35***j* and may thereby turn on each of the p transistors M**31***j*, M**32***j*, M**33***j*, M**34***j* and M**35***j* during the first period of the horizontal period 1H for driving the pixel **140***nj*'. Thus, during the first period of the one horizontal period 1H, a voltage of a terminal of each of the p capacitors CJ, **2**Cj, **4**Cj, **8**Cj and **16**Cj may be to the third supply voltage VSS'.

Then, during the second period of the horizontal period 1H for driving the pixel **140***nj*', the twenty-first transistor M**21***j*, the twenty-second transistor M**22***j*, the twenty-third transistor M**23***j*, the twenty-fourth transistor M**24***j* and the twenty-fifth transistor M**25***j* may be turned on or off in accordance with the second data DATA**2** that may be supplied from the decoder **240***j*. The decoder **240***j* may control the turning on/off of the twenty-first transistor M**21***j*, the twenty-second transistor M**22***j*, the twenty-third transistor M**23***j*, the twenty-fourth transistor M**24***j* and the twenty-fifth transistor M**25***j*. In particular, as discussed above, the decoder **240***j* may control the turning on/off of the twenty-first transistor M**21***j*, the twenty-second transistor M**22***j*, the twenty-third transistor M**23***j*, the twenty-fourth transistor M**24***j* and the twenty-fifth transistor M**25***j* so as to obtain a value approximating to the value of h/f in EQUATION6.

At this time, a voltage V_L of the electrical connection between the forty-first transistor M**41** and the first buffer **270***j* may be expressed by EQUATION12.

$$\begin{aligned} V_L &= Vref - \frac{h}{f}(Vref - VSS) + Vboost \\ Vboost &= \frac{h}{f}(V_{N3} - VSS) \\ &= Vref - \frac{h}{f}(Vref - V_{N3}) \\ &= Vref - \frac{h}{f}\left(\frac{C1 + C2}{C2}\right)\sqrt{\frac{2Imax}{\mu_p C_{OX}}\frac{L}{W}} \end{aligned} \quad \text{[EQUATION12]}$$

A voltage satisfying EQUATION12 may be supplied to the eleventh transistor M**11***j* via the first buffer **270***j*. During the second period of the horizontal period 1H for driving the pixel **140***nj*', because the eleventh transistor M**11***j* may be turned on, the voltage supplied to the first buffer **270***j* may be supplied to the first node N**1***nj*' via the eleventh transistor M**11***j*, the data line Dj and the first transistor M**1***j*. In embodiments of the invention, a voltage satisfying EQUATION12 may be supplied to the first node N**1***nj*'.

A voltage applied to the second node N2*nj*' by the coupling of the second capacitor C2*nj* may be expressed by EQUATION9. Accordingly, current flowing through the fourth transistor M4*nj* may be expressed by EQUATION10. In embodiments of the invention, the current corresponding to the gray scale voltage selected by the DAC **250***j* may flow to the fourth transistor M4*nj* irrespective of the threshold voltage and electron mobility of the fourth transistor M4*nj*. As discussed above, embodiments of the invention enable the display of images with uniform brightness.

In some embodiments of the invention, e.g., embodiments employing the pixel **140***nj*' illustrated in FIG. **11**, the voltage of the second node N2*nj*' may change gradually although the voltage of the first node N1*nj*' may change rapidly, i.e., (C1+C2)/C2. When the pixel **140***nj*' illustrated in FIG. **11** is employed, a greater voltage range may be set for the voltage generator **240***j* than a voltage range that may be set for the voltage generator **240***j* when the pixel **140***nj* illustrated in FIG. **8** is employed. As discussed above, when the voltage range of the voltage generator **240***j* is set to be larger, it is possible to reduce the influence of the switching error of the 11th transistor M11*j* and the first transistor M1*nj*.

Accordingly, the pixel structure **140***nj*' shown in FIG. **5** can extend an available voltage range of the gamma voltage unit **300**, compared with the pixel structure **140***nj* shown in FIG. **3**. As such, by extending the available voltage range of the gamma voltage unit **300**, it is possible to reduce influences by switching errors of the eleventh transistor M11*j*, the first transistor M1*nj*, etc.

As described above, in data driving circuits, data driving methods and light emitting displays employing one or more aspects of the invention, because a voltage of a data signal is reset using a compensation voltage generated when current sinks from a respective pixel, uniform images can be displayed regardless of electron mobility, threshold voltages, etc. of transistors.

Exemplary embodiments of the present invention have been disclosed herein, and although specific terms are employed, they are used and are to be interpreted in a generic and descriptive sense only and not for purpose of limitation. Accordingly, it will be understood by those of ordinary skill in the art that various changes in form and details may be made without departing from the spirit and scope of the present invention as set forth in the following claims.

What is claimed is:

1. A data driving circuit for driving a pixel of a light emitting display based on externally supplied first data for the pixel, wherein the pixel is electrically connectable to the driving circuit via a data line, the data driving circuit comprising:

a gamma voltage unit generating a plurality of gray scale voltages;

a digital-analog converter selecting, as a data signal, one of the plurality of gray scale voltages using k bits of the first data, k being a natural number;

a decoder generating p bits of second data using the k bits of the first data, p being a natural number;

a current sink receiving a predetermined current from the pixel during a first partial period of a complete period for driving the pixel based on the selected gray scale voltage;

a voltage controller controlling a voltage value of the data signal using the second data and a compensation voltage generated based on the predetermined current received by the current sink, the compensation voltage being supplied from the current sink to the voltage controller; and

a switching unit supplying the data signal, with the controlled voltage value, to the pixel, the switching unit supplying the data signal during any partial period of the complete period elapsing after the first partial period of the complete period.

2. The data driving circuit as claimed in claim **1**, wherein the decoder converts the first data into a binary weighted value to generate the second data.

3. The data driving circuit as claimed in claim **1**, further comprising:

a first transistor disposed between the digital-analog converter and the switching unit, the digital-analog converter being turned on during a predetermined time of the first partial period to transfer the data signal, with the controlled voltage value, to the switching unit; and

a first buffer connected between the first transistor and the switching unit.

4. The data driving circuit as claimed in claim **3**, wherein the gamma voltage unit comprises:

a plurality of distribution resistors for generating the gray scale voltages and distributing a reference supply voltage and a first supply voltage; and

a second buffer for supplying the first supply voltage to the voltage controller.

5. The data driving circuit as claimed in claim **4**, wherein the voltage controller comprises:

p capacitors, each of the p capacitors having a first terminal that is connected to an electrical path between the a first transistor and the first buffer;

second transistors respectively connected between a second terminal of each of the p capacitors and the a second buffer; and

third transistors respectively connected between the second terminal of each of the p capacitors and the current sink, the third transistors being of a conduction type different from a conduction type of the second transistors.

6. The data driving circuit as claimed in claim **5**, wherein the decoder turns on the second transistors during the first partial period, and supplies the first supply voltage to the respective second terminals of the p capacitors.

7. The data driving circuit as claimed in claim **5**, wherein capacitances of the p capacitors are set to binary weighted values.

8. The data driving circuit as claimed in claim **7**, wherein the decoder turns on and off the third transistors based on a number of bits of the second data and during the second partial period, the decoder selectively controls a supply of the compensation voltage to the respective second terminals of the p capacitors.

9. The data driving circuit as claimed in claim **1**, wherein the current sink comprises:

a source providing the predetermined current;

a first transistor disposed between the data line connected to the pixel and the voltage controller, the first transistor being turned on during the first partial period;

a second transistor disposed between the data line and the current source, the second transistor being turned on during the first partial period;

a capacitor storing the compensation voltage; and

a buffer disposed between the first transistor and the voltage controller, the buffer selectively transferring the compensation voltage to the voltage controller.

10. The data driving circuit as claimed in claim **9**, wherein a current value of the predetermined current is equal to a current value of a minimum current flowing through the pixel when the pixel emits light with maximum brightness, and

maximum brightness corresponds to a brightness of the pixel when a highest one of the plurality of reset gray scale voltages is applied to the pixel.

11. The data driving circuit as claimed in claim **1**, wherein the switching unit comprises at least one transistor which is turned on during the second partial period.

12. The data driving circuit as claimed in claim **11**, wherein the switching unit comprises two transistors which are connected so as to form a transmission gate.

13. The data driving circuit as claimed in claim **1**, further comprising:

a shift register unit including at least one shift register for sequentially generating a sampling pulse;

a sampling latch unit including at least one sampling latch for receiving the first data in response to the sampling pulse; and

a holding latch unit including at least one holding latch for receiving the first data stored in the sampling latch and supplying the first data stored in the holding latch to the digital-analog converter and the decoder.

14. The data driving circuit as claimed in claim **13**, further comprising:

a level shifter for selectively modifying a voltage level of the first data stored in the holding latch and supplying the first data to the digital-analog converter and the decoder.

15. A light emitting display receiving externally supplied first data, comprising:

a pixel unit including a plurality of pixels connected to n scan lines, a plurality of data lines, and a plurality of emission control lines;

a scan driver respectively and sequentially supplying, during each scan cycle, n scan signals to the n scan lines, and for sequentially supplying emission control signals to the plurality of emission control lines; and

a data driver including a current sink receiving a predetermined current from respective ones of the pixels selected by a first scan signal during a first partial period of a complete period and respective compensation voltages being generated based on the predetermined current received by the current sink, respectively controlling voltage values of data signals using the respective compensation voltages supplied from the current sink and respective second data generated by converting the respective first data into second data using binary weighted values, and respectively supplying the data signals, with the controlled voltage values, to the data lines during a partial period of the complete period that elapses after the first partial period of the respective complete period associated with each of the respective pixels.

16. The light emitting display as claimed in claim **15**, wherein each of the pixels is connected to two of the n scan lines, and during each of the scan cycles, a first of the two scan lines receiving a respective one of the n scan signals before a second of the two scan lines receives a respective one of the n scan signals, and each of the pixels comprises:

a first power source;

a light emitter receiving current from the first power source;

first and second transistors each having a first electrode connected to the respective one of the data lines associated with the pixel, the first and second transistors being turned on when the first of the two scan signals is supplied;

a third transistor having a first electrode connected to a reference power source and a second electrode connected to a second electrode of the first transistor, the third transistor being turned on when the first of the two scans signal is supplied;

a fourth transistor controlling an amount of current supplied to the light emitter, a first terminal of the fourth transistor being connected to the first power source; and

a fifth transistor having a first electrode connected to a gate electrode of the fourth transistor and a second electrode connected to a second electrode of the fourth transistor, the fifth transistor being turned on when the first of the two scan signals is supplied such that the fourth transistor operates as a diode.

17. The light emitting display as claimed in claim **16**, wherein each of the pixels comprises:

a first capacitor having a first electrode connected to one of a second electrode of the first transistor or the gate electrode of the fourth transistor and a second electrode connected to the first power source; and

a second capacitor having a first electrode connected to the second electrode of the first transistor and a second electrode connected to the gate electrode of the fourth transistor.

18. The light emitting display as claimed in claim **16**, wherein each of the pixels further comprises a sixth transistor having a first terminal connected to the second electrode of the fourth transistor and a second terminal connected to the light emitter, the sixth transistor being turned off when the respective emission control signal is supplied,

wherein the current sink in the data driver receives the predetermined current from the pixel during a first partial period of one complete period for driving the pixel, the first partial period occurring before a second partial period of the complete period for driving the pixel, and the sixth transistor is turned on during the second partial period of the complete period for driving the pixel.

19. A method for driving a light emitting display, comprising:

selecting, as a data signal, one of a plurality of gray scale voltages based on k bits of externally supplied first data, k being a natural number;

converting the first data into a binary weighted value and generating p bits of second data, p being a natural number;

receiving in a current sink a predetermined current from a pixel selected by a scan signal during a first partial period of a complete period for driving the pixel based on the selected gray scale voltage,

generating a compensation voltage based on the predetermined current when the predetermined current is received by the current sink;

controlling a voltage value of the data signal using the generated second data and the generated compensation voltage supplied from the current sink; and

after controlling the voltage value of the data signal, supplying the data signal to the pixel, the data signal being supplied to the pixel during a second partial period of the complete period for driving the pixel.

20. The method as claimed in claim **19**, further comprising generating the plurality of gray scale voltages by distributing a voltage between reference supply voltage and a first supply voltage among a plurality of voltage dividing resistors.

21. The method as claimed in claim **19**, wherein controlling the voltage value of the data signal comprises:

supplying a voltage value of a first power source to a first terminal of a each of a plurality of capacitors during the first partial period; and

selectively controlling a supply of the compensation voltage to the respective second terminals of the plurality of capacitors based on a number of bits of the second data, during a second partial period of the complete period.

22. A data driving circuit for driving a light emitting display, comprising:

selecting means for selecting, as a data signal, one of a plurality of gray scale voltages based on k bits of externally supplied first data, k being a natural number;

converting means for converting the first data into a binary weighted value and generating p bits of second data, p being a natural number;

receiving means for receiving predetermined current from a pixel selected by a scan signal during a first partial period of a complete period for driving the pixel based on the selected gray scale voltage, and a compensation voltage being generated based on the predetermined current when the predetermined current is received from the pixel;

voltage controlling means for controlling a voltage value of the data signal using the generated second data and the generated compensation voltage supplied from the current receiving means to the voltage controlling means; and

after controlling the voltage value of the data signal, supplying the data signal to the pixel, the data signal being supplied to the pixel during a second partial period of the complete period for driving the pixel.

* * * * *

UNITED STATES PATENT AND TRADEMARK OFFICE

CERTIFICATE OF CORRECTION

PATENT NO. : 7,893,897 B2
APPLICATION NO. : 11/491880
DATED : February 22, 2011
INVENTOR(S) : Bo Yong Chung et al.

It is certified that error appears in the above-identified patent and that said Letters Patent is hereby corrected as shown below:

Title page, in the heading of the patent, paragraph Item (73) is amended to read as follows:

Item (73) Assignee: SAMSUNG MOBILE DISPLAY CO., LTD.,
Suwon-si, Gyeonggi-do, (KR)

and

IUCF-HYU (Industry-University Coopeation Foundation Hanyang University) HANYANG UNIVERSITY,
Seongdong-gu, Seoul (KR)

Signed and Sealed this
Twenty-seventh Day of September, 2011

David J. Kappos

David J. Kappos
Director of the United States Patent and Trademark Office

专利名称(译)	基于电压的数据驱动电路和使用其的有机发光显示器的驱动方法		
公开(公告)号	US7893897	公开(公告)日	2011-02-22
申请号	US11/491880	申请日	2006-07-25
[标]申请(专利权)人(译)	众博ÿ RYU做H的 金弘ķ KWON OHķ		
申请(专利权)人(译)	众博ÿ RYU做H的 金弘ķ KWON OHķ		
当前申请(专利权)人(译)	三星DISPLAY CO.，LTD. IUCF-HYU		
[标]发明人	CHUNG BO YONG RYU DO HYUNG KIM HONG KWON KWON OH KYONG		
发明人	CHUNG, BO YONG RYU, DO HYUNG KIM, HONG KWON KWON, OH KYONG		
IPC分类号	G09G3/30		
CPC分类号	G09G3/2011 G09G3/3233 G09G3/3283 G09G3/3291 G09G2300/0819 G09G2300/0852 G09G2300/0861 G09G2310/0251 G09G2310/027 G09G2310/0289 G09G2320/0276 G09G2320/043		
审查员(译)	阮筝		
优先权	1020050070438 2005-08-01 KR		
其他公开文献	US20070024542A1		
外部链接	Espacenet USPTO		

摘要(译)
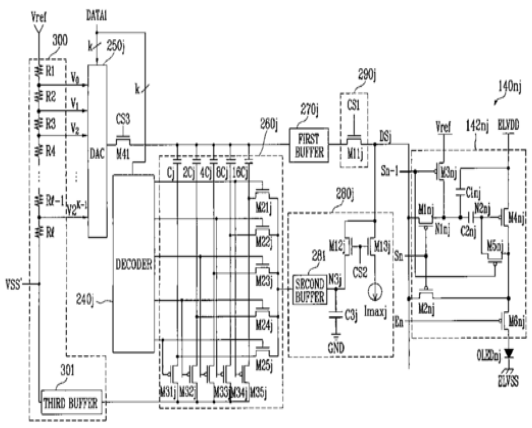
用于驱动发光显示器的像素以显示具有均匀亮度的图像的数据驱动电路可包括产生多个灰度电压的伽马电压单元，数字 - 模拟转换器，其选择多个中的一个作为数据信号使用第一数据的灰度级电压，使用第一数据产生第二数据的解码器，电流吸收器，使用第二数据控制数据信号的电压值的电压控制器和基于预定电流产生的补偿电压，以及在第一部分时段之后流逝的完整时段的任何部分时段期间将数据信号提供给像素的切换单元。电流吸收器在用于基于所选择的灰度级电压驱动像素的完整时段的第一部分时段期间从像素接收预定电流。